RECYFIX HICAP F

High capacity drainage system for the highest load category.

Yas Marina Circuit, Abu Dhabi, U.A.E.

RECYFIX HICAP F

High capacity drainage system for the highest load category.

1 Requirements

Drainage system for extreme conditions with

- high hydraulic requirements
- high loads
- large areas
- ailing sewer systems

2 Application areas

- parking areas
- supermarkets/shopping centres
- pedestrian areas
- airports
- industrial estates
- container terminals
- ports
- circuits and test tracks

3 Solutions

Special features of RECYFIX HICAP:

- drainage and retention in one component
- large selection of nominal widths
- for all loading classes and all common road surface finishes
- variety of variants:
  - stainless steel slot & design grating WAVE
  - ductile iron slots
- less manholes and outlets
- provides an uniform visual appearance also in lage projects
- no separate gratings
- no expensive pipe installations required
- high hydraulic capacity
- easy to maintain

Chopin Airport, Warsaw, Poland

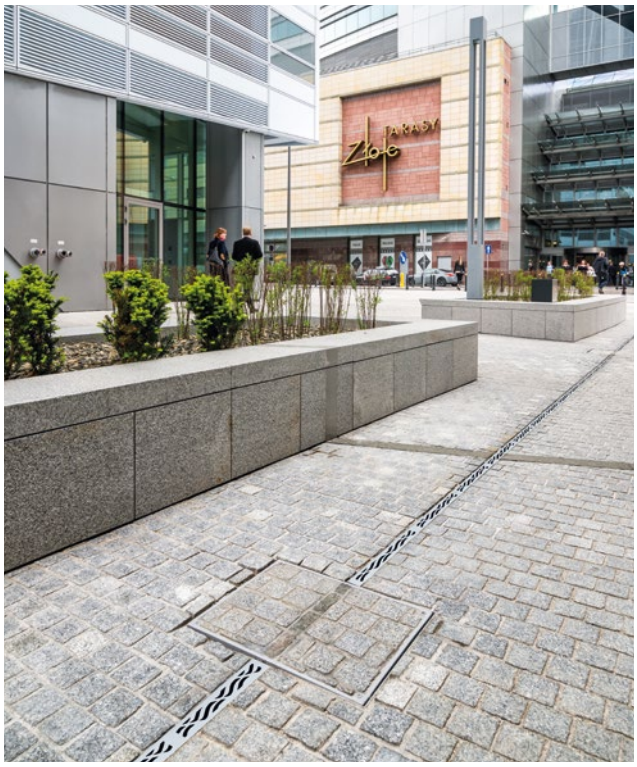

Pedestrian area, Poland

Viettel company headquarters, Hanoi, Vietnam

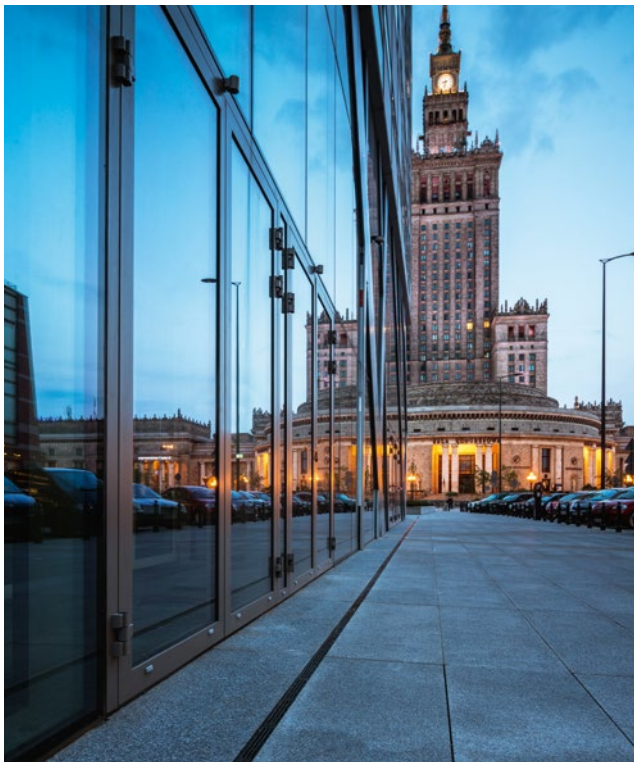

Skyscraper ZLOTA 44 in Warsaw, Poland

Teesport Container Terminal, UK

RECYFIX HICAP F

Water drainage and retention.

Retention

The design of RECYFIX HICAP, channels is unique due to its high hydraulic efficiency which ensures additional retention capacity. The system simultaneously performs three tasks:

- drains water, even from large areas
- stores excessive amounts of water
- channels water to the discharge point

RECYFIX HICAP, eliminates the need for additional storage reservoirs.

Modular design – low number of connections

RECYFIX HICAP, is so effective because large areas can be implemented with one single channel run. Starting with a nominal width of 100 mm it offers the option to expand up to 680 mm.
Drainage wells can be installed in any chosen location used for connecting channels to sewage systems or for connecting other drainage channels – it can also be used as a pumping well/chamber.

Comparison of flow capacity l/s

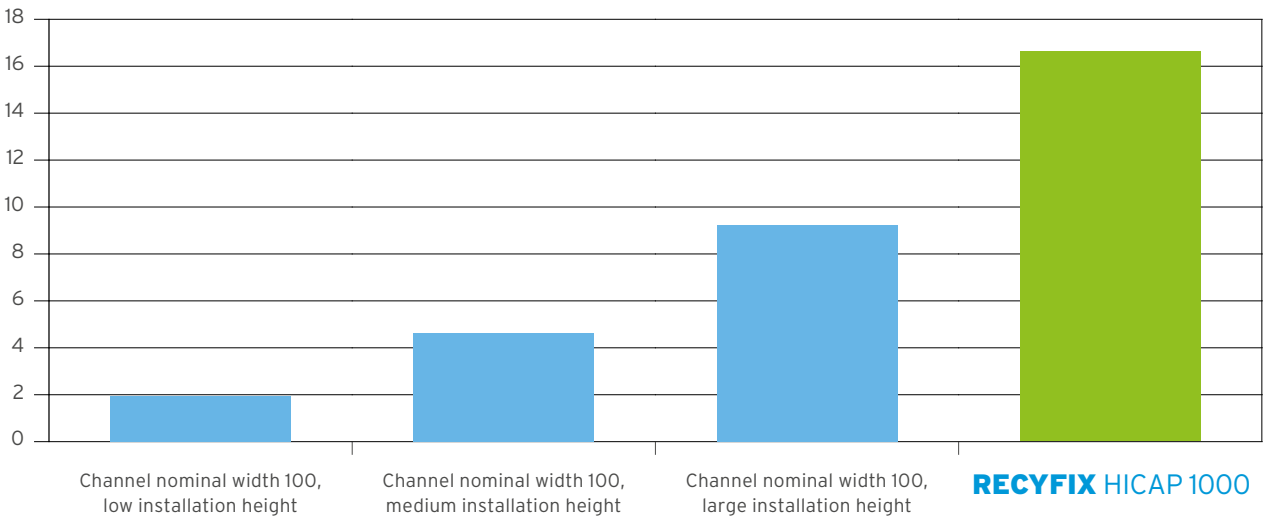

Range of **RECYFIX** HICAP

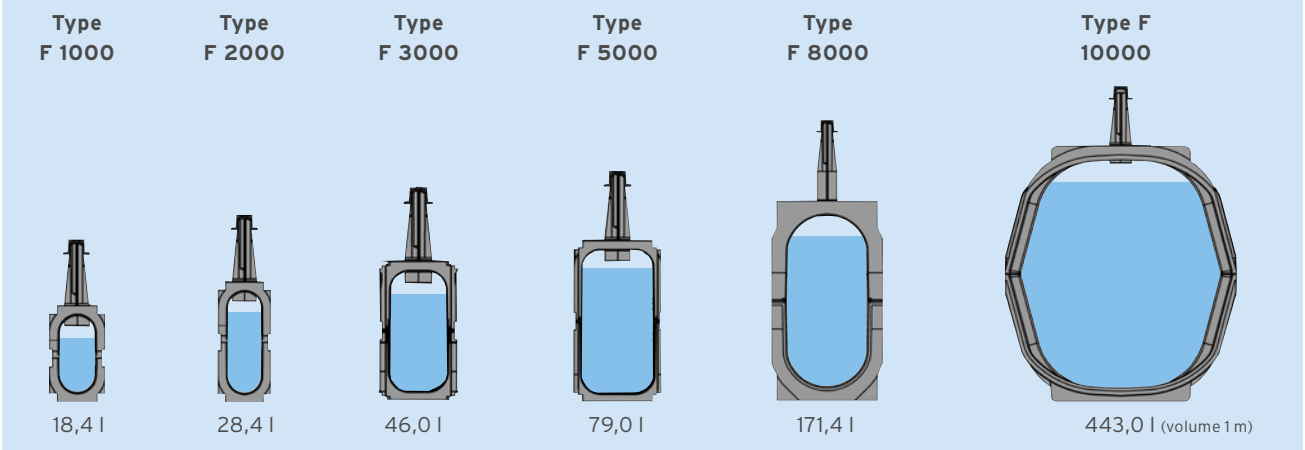

A practical example:

The following practical example demonstrates the large drainage- and retention capacity of RECYFIX HICAP channels:

Logistics Centre Plovdiv, Bulgaria

Channel length: 356 m, divided:

- 66 m RECYFIX HICAP F 5000 Type 5300, slot 28 mm
- 136 m RECYFIX HICAP F 8000 Type 8300, slot 28 mm
- 154 m RECYFIX HICAP F 10000 Type 10300, slot 28 mm

Total drainage area: 10,730 m²
Runoff coefficient (specified by the planner): 0.85
Rain yield factor (specified by the planner): 300 l/s ha

➞ **Discharge capacity at end of channel run: 252 l/s**

One single channel run drains a surface of more than 10,000 m², directs the entire water amount over more than 356 m and at the end releases it into the public sewer at one single point at a rate of 252 l/s.

RECYFIX HICAP F

Water drainage and retention.

Sample calculation

RECYFIX HICAP F, ductile iron mesh 13/28

The hydraulic advantages of RECYFIX HICAP channels can be demonstrated by the following calculation:

Inlet capacity of a ductile iron mesh 13/28 mm grating, determined at Prague Technical University: **4.0 l/s per metre**

Frequently occurring yield from rain events: **150 l/s per hectare**

150 l/s ha = 0.015 l/s m²

$$\frac{\textbf{4.0 l/s m}}{\textbf{0.015 l/s m}^2} = \textbf{266.67 m}^2$$

Result of this example:

1 m RECYFIX HICAP channel with ductile iron mesh 13/28 mm grating can discharge the rainwater from 266.67 m² when the yield is 150 litres per second and hectare.

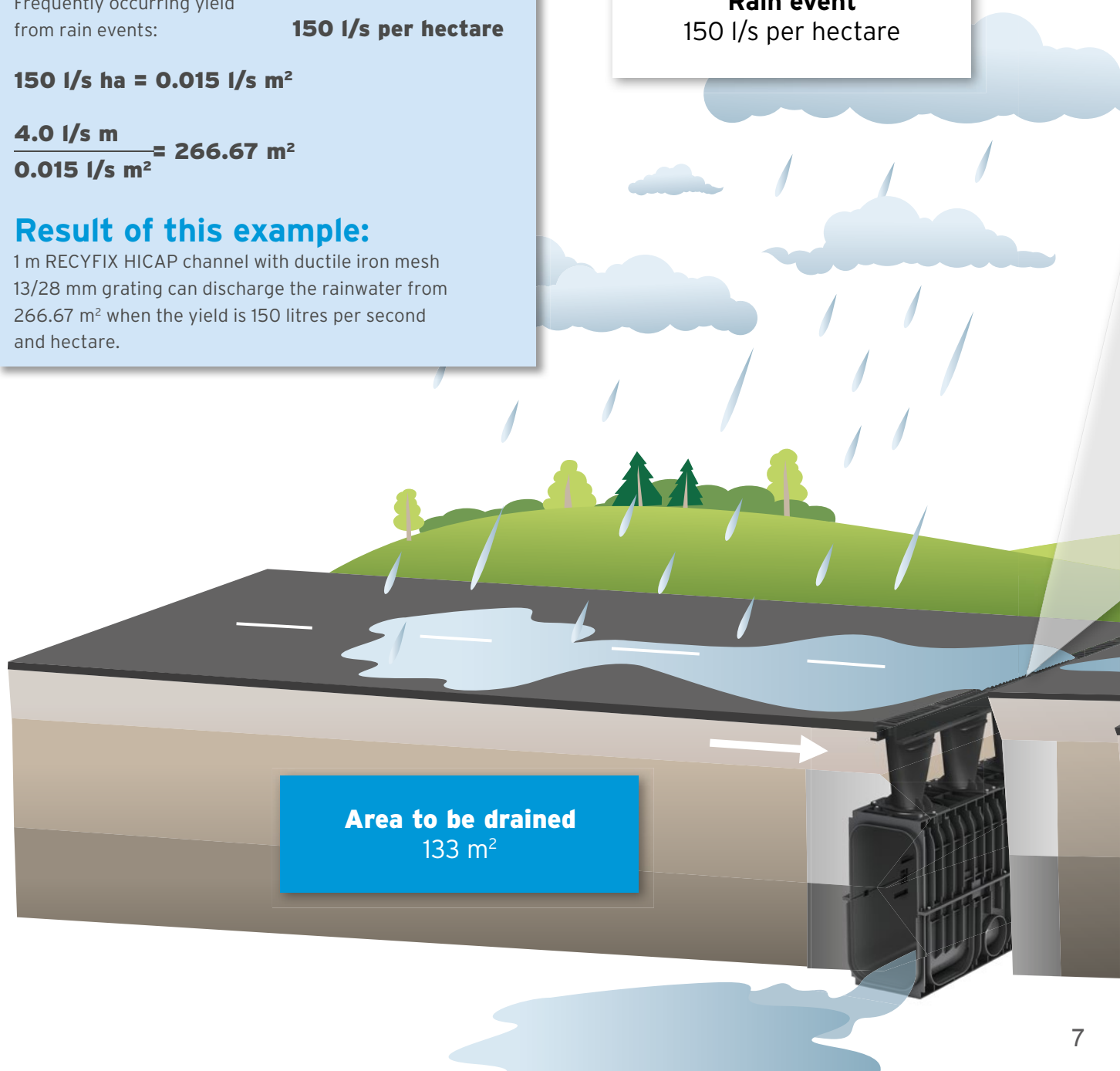

Inlet capacity of **RECYFIX** HICAP F

(applies to all nominal widths)

stainless steel slot 24 mm	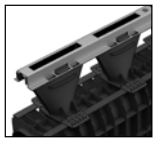	5.8 l/s per metre
stainless steel design grating WAVE 6 mm	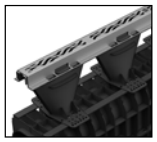	2.3 l/s per metre
ductile iron slot 6 mm		3.1 l/s per metre
ductile iron mesh 13/28 mm		5.8 l/s per metre
ductile iron slot 28 mm		6.8 l/s per metre
ductile iron slot 14 mm		4.6 l/s per metre

measured during excess backwater testing at 10 mm

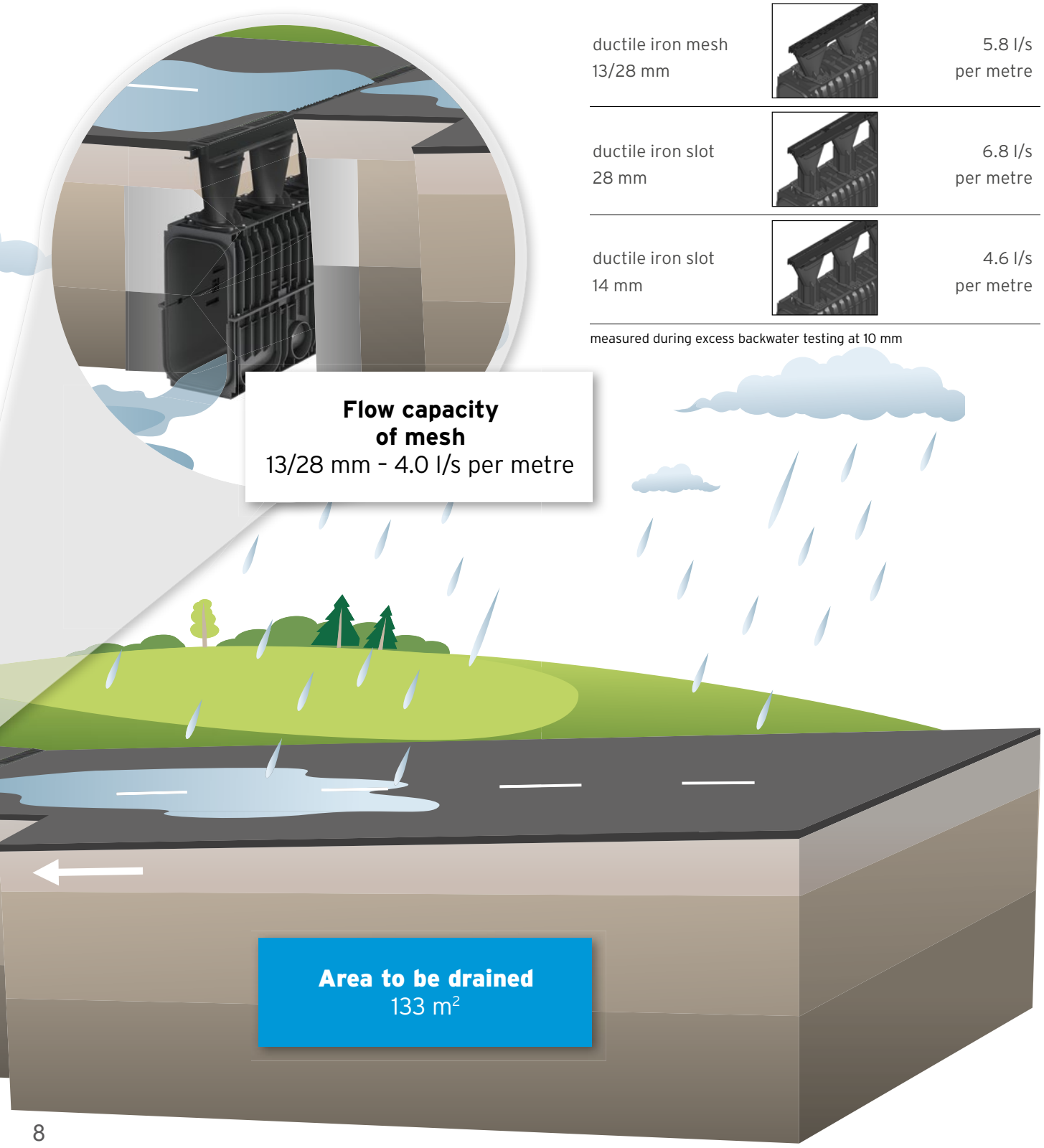

YOUR BENEFITS WITH **RECYFIX** HICAP F

FAST AND EASY INSTALLATION

- easy to handle and install without heavy lifting equipment
- innovative Link&Lock grating connection for easy and quick straight channel alignment
- integrated tongue and groove joint
- PP channel body can be cut, drilled and worked easily on site
- reduced pipe-work installations

= TIME- & COST SAVINGS

INDIVIDUAL SOLUTIONS

- accommodates radius installation
- wide range of uniform design gratings in KTL ('cathodic dip' coated) and stainless steel
- configurable as 'constant-depth' or 'stepped-fall'
- cable and pipe installations can be laid through throat voids between funnels
- ductile iron top on the surface can be interrupted while channels continue underground

= DESIGN FLEXIBILITY

VARIOUS CONNECTION POSSIBILITIES

- end cap with channel connection option
- simple possibility for preparation of corner and T-connections in connection with the trash box
- step-fall connector for connecting the next nominal width
- various pre-formed pipe-connections for added flexibility

= DESIGN FLEXIBILITY / PERFORMANCE ASSURED

HIGH RESISTANCE

- high-level resistance to fuels/oils, frost, salt and UV-rays
- withstands high temperature differences
- fit-for-purpose in climate temperatures ranging from minus - 50 °C to + 80 °C and more
- gratings in spheroidal ductile iron (KTL 'cathodic dip' coated); for high impact/corrosion resistance

= QUALITY ASSURED & LONGEVITY

LARGE RETENTION VOLUME

- drainage and retention in one component
- high capacity and back-pressure capacity due to a variety of nominal widths
- fewer chamber and pipe connections required

= PERFORMANCE ASSURED / COST SAVINGS

HIGH-GRADE MATERIAL

- top inlet made of high-quality ductile iron → much higher tensile and compressive strength than channels made of polymer/resin concrete
- high-grade **RECYFIX** channel components from very light and almost unbreakable material
- 100 % recycled PP composite body (and 100 % recyclable) for full environmental standards compliance
- smooth inner surface for superior flow characteristics
- 0 % water absorption

= QUALITY- & PERFORMANCE ASSURED

HIGH STABILITY

- designed for superior resistance to dynamic forces and loads up to class F 900
- torsion-free ribs and throat voids for additional structural integrity and rigidity

= PERFORMANCE ASSURED

IDEAL FOR ...

drainage and retention for the highest load areas, such as airports, industrial estates and container terminals.

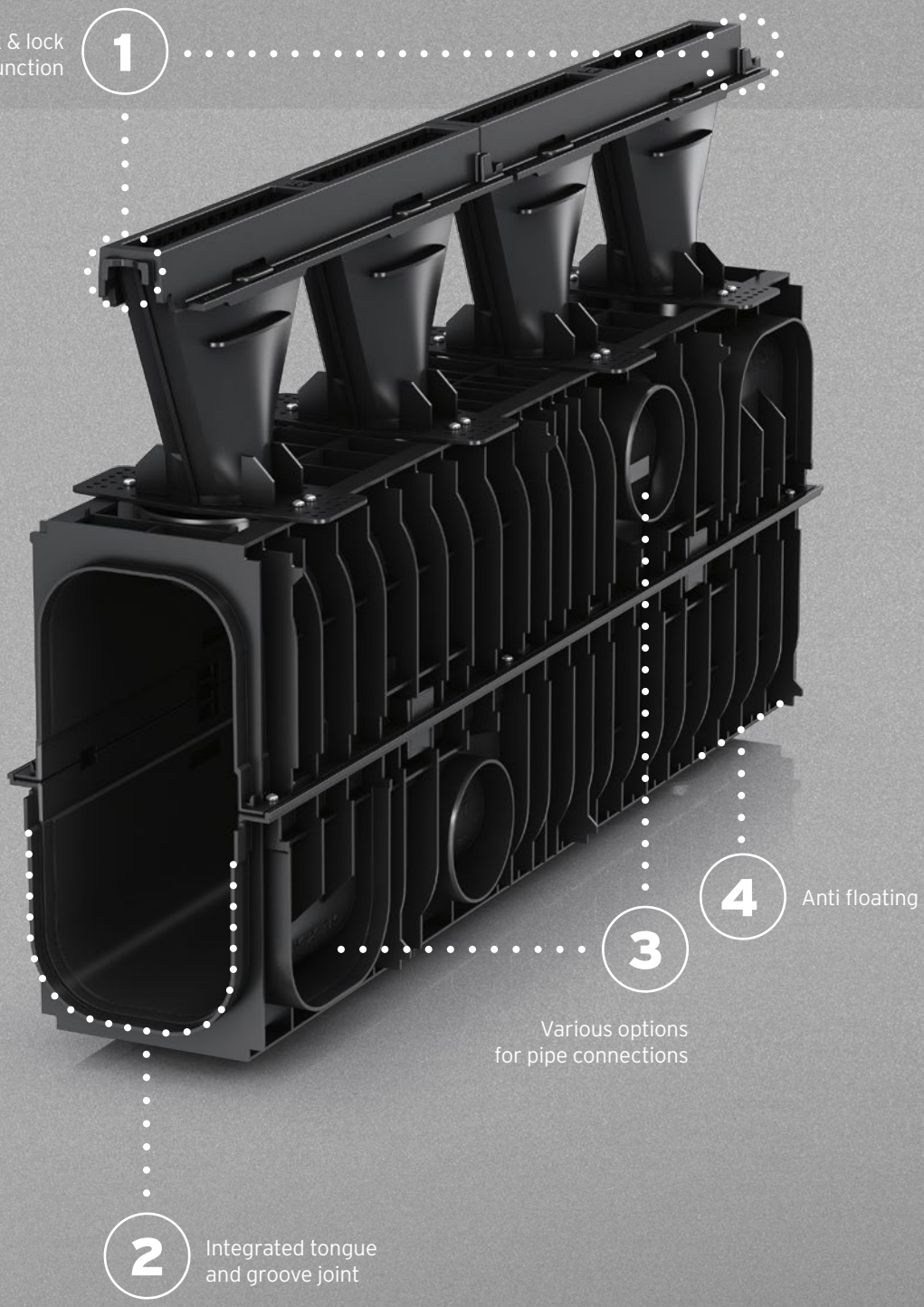

RECYFIX HICAP F

High capacity drainage system for the highest load category.

RECYFIX HICAP channels meet the requirements of DIN EN 1433 and are suitable for the following load categories:

	Category A 15
	Category B 125
	Category C 250
	Category D 400
	Category E 600
	Category F 900

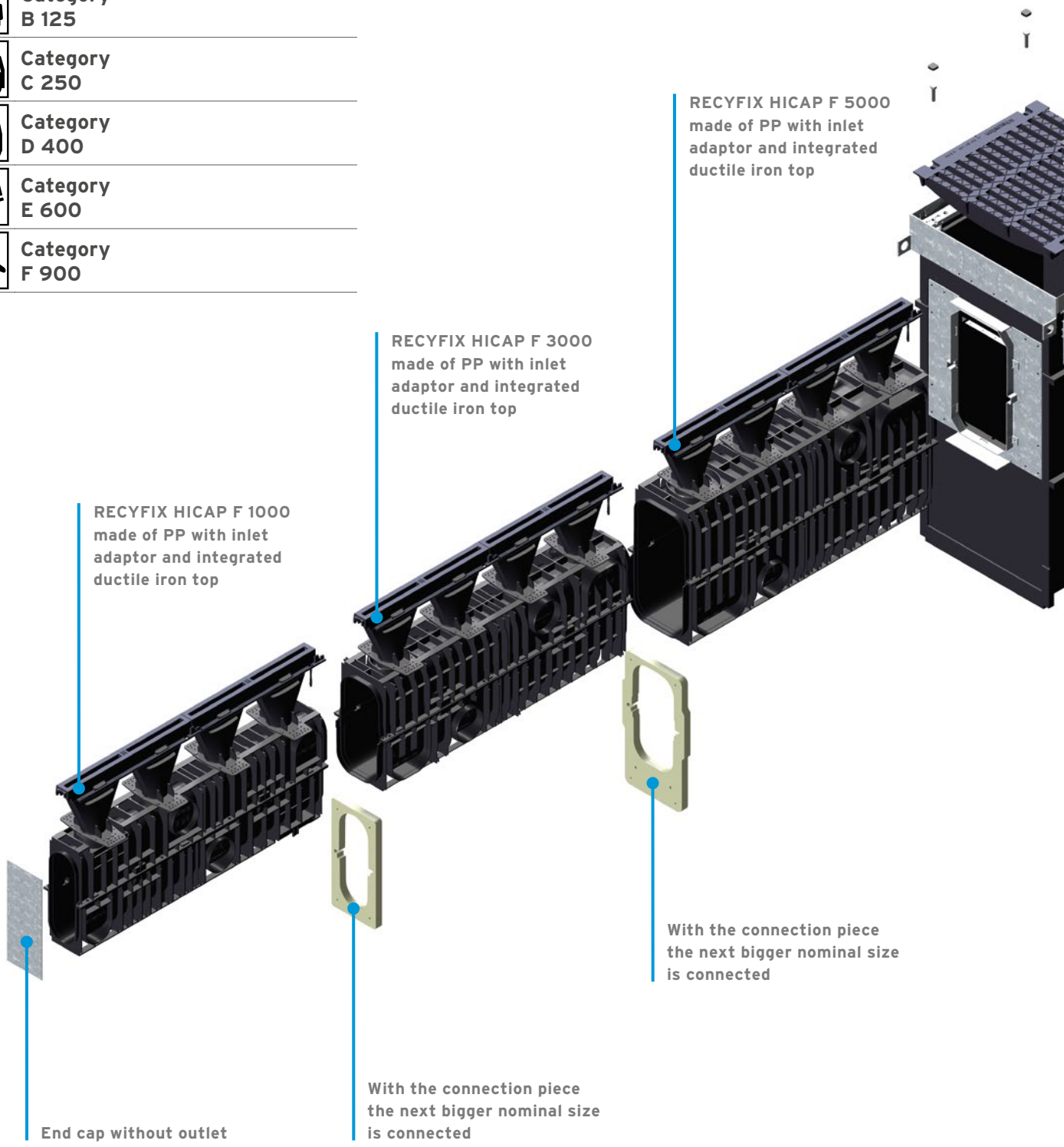

RECYFIX HICAP F 10000
made of PP with inlet
adaptor and integrated
ductile iron top

RECYFIX HICAP F 8000
made of PP with inlet
adaptor and integrated
ductile iron top

End cap 10000
with pipe connection
possibility

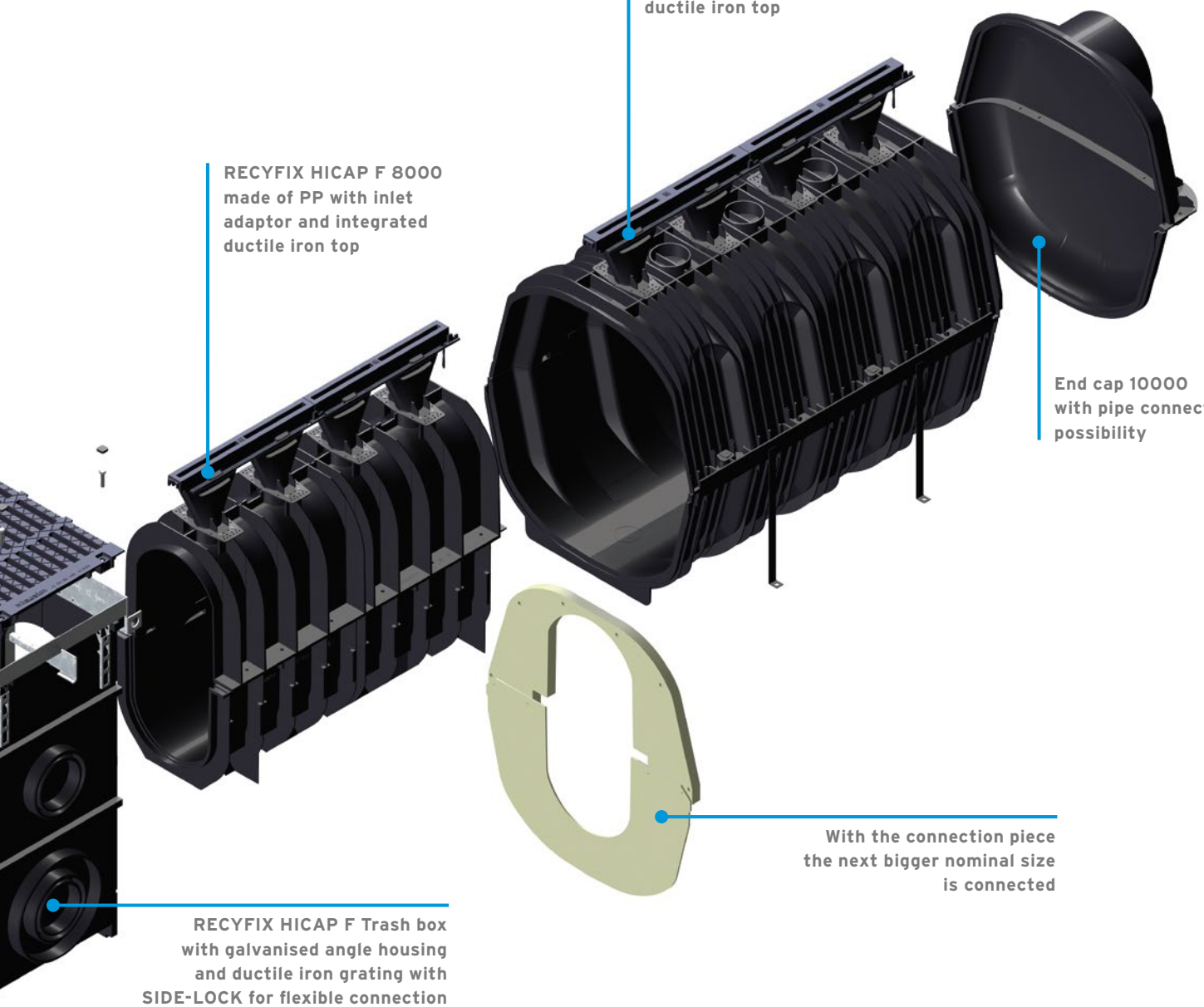

With the connection piece
the next bigger nominal size
is connected

RECYFIX HICAP F Trash box
with galvanised angle housing
and ductile iron grating with
SIDE-LOCK for flexible connection
of different nominal sizes

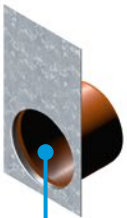

With the connection piece
the next bigger nominal size
is connected

End caps with outlet

RECYFIX HICAP F

Effectively drained - modularly built.
Drainage and retention system for larger areas.

Report from the field:
RECYFIX HICAP F **channels for Heathrow Airport, London**

With 67 million travellers annually, Heathrow Airport in London is Europe's busiest airport. Worldwide it takes third place behind Atlanta and Chicago. This important hub in international air traffic is operated by BAA, British Airports Authority, the largest airport operator worldwide. 75 % of the British Airways fleet is based at Heathrow Airport.

At the southern section of the airport the British Airways service park was expanded. The construction site abutted right on the runway and taxiway. The demands on the new service site were immense: here airplanes of all types and sizes pass - including the Airbus A380, which was also a main reason for the reconstruction. The aircraft tugs alone weigh 80 tons and, just as the airplanes, drive and turn on the traffic areas. The demands on the drainage systems are accordingly high.

Project progress

In 1999 BAA was supplied with FASERFIX SUPER channels for the Gatwick airport and installed in the British Airways hangars and Concorde maintenance hangars. One year later, FASERFIX SUPER KS 100 channels were delivered to London City Airport. The assigned engineering office was very satisfied with the quality and service. In 2003 BAA broached the topic of installation and handling of drainage systems. The main topic of the discussions was the extreme weight of the products and the associated high employment of machines during installation.

On multiple occasions, HAURATON contacted various departments of BAA and presented the advantages of RECYFIX products (lightweight, easy handling, meets British "Health and Safety Regulations" = One-man-lift = max. 25 kg). Drainage channels from this line were presented in various meetings and BAA decided across the board to work with HAURATON in the area of RECYFIX.

RECYFIX HICAP F **- eco-friendly and 'easy to handle'**

Another key criterion for BAA was recycling. Airport planning and operation are subject to stringent environmental requirements. Products made of recycled plastic are therefore especially suited.

Suppliers routinely need to present BAA with product innovations which offer cost savings in installation and maintenance. In 2006 the time came for HAURATON to present the new line RECYFIX HICAP. The feedback was very positive, with BAA immediately recognising the resulting advantage in installation and maintenance, and the installation at Heathrow was decided.

Installed items

- 380 m RECYFIX HICAP F 8000
- 100 m RECYFIX HICAP F 5000
- 100 m RECYFIX HICAP F 3000

Lightweight elements, installed by one single worker.

Other examples of **RECYFIX** HICAP F

RECYFIX HICAP F

High capacity drainage system for the highest load category.

Inlet slots of **RECYFIX** HICAP F **system**

System RECYFIX HICAP F offers a wide selection of inlet slots.

- slots are joined in an innovative way to ensure stability and facilitate the installation process
- wide range of design solutions provides designers with many customization options for planned investments.
- all standard inlet slots are protected by KTL-coating which prevents oxidation of iron and ensures long term preservation of their black colour.
- galvanized iron grating is also available in silver colour.
- top-class aesthetics when using stainless steel gratings.

Ductile iron gratings

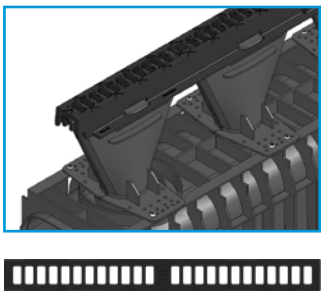

Slot 13/28 mm
- KTL-coating
- slot size 13 x 28 mm
- intake cross-sect 172 cm²/m
- application: **road surfaces**

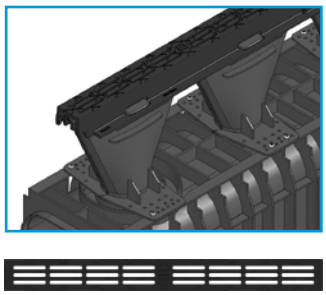

Slot 6 mm
- KTL-coating
- slot size 5 x 51 mm
- intake cross-sect 154 cm²/m
- application: **pedestrian traffic**

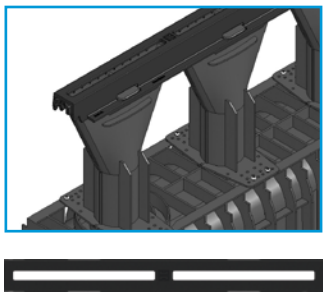

Slot 14 mm
- KTL-coating
- slot size 14 x 221 mm
- intake cross-sect 124 cm²/m
- application: **industrial areas**

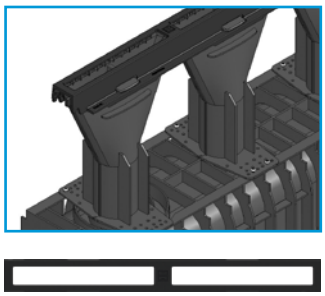

Slot 28 mm
- KTL-coating
- slot size 28 x 221 mm
- intake cross-sect. 248 cm²/m
- application: **industrial areas**

Stainless steel gratings

Slot 24 mm
- slot size 24 x 221 mm
- intake cross-sect 211 cm²/m
- application: **industrial areas**

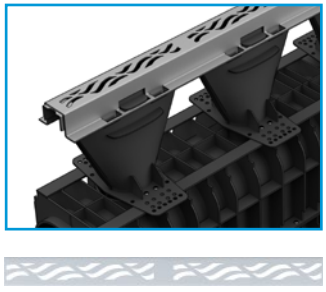

Design grating WAVE 6 mm
- maximum slot width 6,5 mm
- intake cross-sect 78 cm²/m
- application: **prestigious areas/pedestrian areas**

Discontinuous design

Inlet elements don't have to be installed on every channel's body. The draining line is continuous under the surface, but its top part may be covered.

Customized solutions

All elements of the system can be adapted to the individual requirements and building conditions of a given project. Both the height of the channels and the preparation of special solutions can be adjusted:

- gratings design (individual pattern of stainless steel inlet slot),
- covers for trash boxes,
- or angular connections of channels.

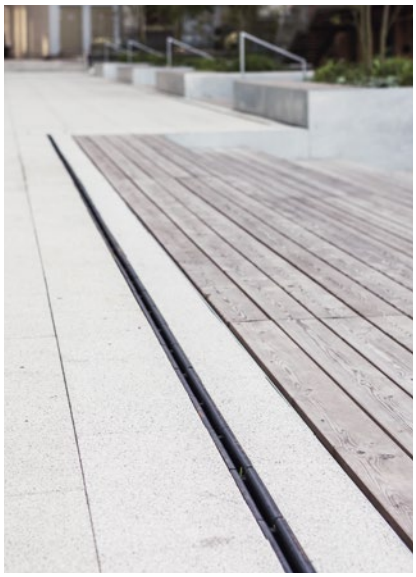

Special solution for Bałtyk Tower in Pozna.

RECYFIX®HICAP®F 1000

RECYFIX®HICAP®F 1000 up to load class D 400

Type 1200, ductile iron slot 6 mm, 1,0 m

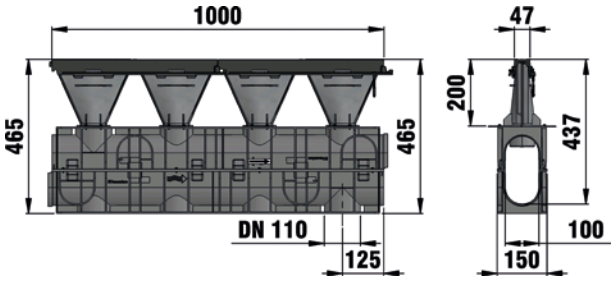

Type 1200, stainless steel design grating WAVE 6 mm, 1,0 m

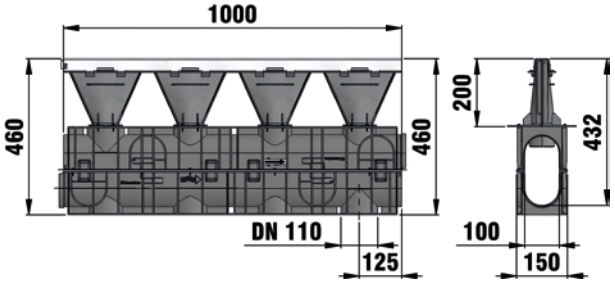

	Length mm	Width mm	Height mm	Internal channel cross-sect. cm²	Intake cross-sect. cm²/m	Funnel H mm	Weight kg	Item No.
Type 1200, ductile iron slot 6 mm, 1,0 m	1000	150	465	184	129	200	10,75	13000
Type 1200, stainless steel design grating WAVE 6 mm, 1,0 m	1000	150	460	184	44	200	8,70	13026

RECYFIX®HICAP®F 1000

RECYFIX®HICAP®F 1000 up to load class E 600

Type 1200, stainless steel slot 24 mm, 1,0 m

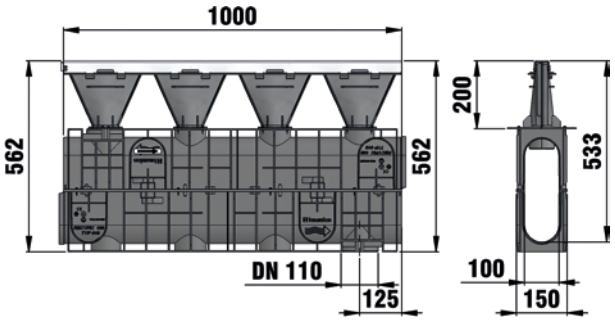

	Length mm	Width mm	Height mm	Internal channel cross-sect. cm²	Intake cross-sect. cm²/m	Funnel H mm	Weight kg	Item No.
Type 1200, stainless steel slot 24 mm, 1,0 m	1000	150	460	184	211	200	8,50	13029

RECYFIX®HICAP®F 1000 up to load class F 900

Type 1200, ductile iron slot 28 mm, 1,0 m

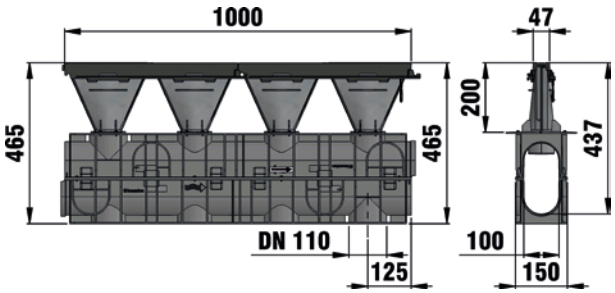

	Length mm	Width mm	Height mm	Internal channel cross-sect. cm²	Intake cross-sect. cm²/m	Funnel H mm	Weight kg	Item No.
Type 1200, ductile iron mesh 13/28 mm, 1,0 m	1000	150	465	184	172	200	10,75	13025
Type 1200, ductile iron slot 28 mm, 1,0 m	1000	150	465	184	248	200	9,91	13035
Type 1200, ductile iron slot 14 mm, 1,0 m	1000	150	465	184	124	200	10,75	13023

RECYFIX®HICAP®F 1000

RECYFIX®HICAP®F 1000, Accessories

End cap closed, galvanised, type 1000

End cap with PVC-U pipe outlet DN/OD 110, galvanised, type 1000

	Length mm	Width mm	Height mm	Weight kg	Item No.
End cap closed, galvanised, type 1000	-	140	250	0,54	13013
End cap with PVC-U pipe outlet DN/OD 110, galvanised, type 1000	-	140	250	1,20	13018
Chamber connector for RECYFIX HICAP F 1000, 1 m	1000	150	260	3,87	13096

RECYFIX®HICAP®F 1000

RECYFIX®HICAP®F Trash boxes

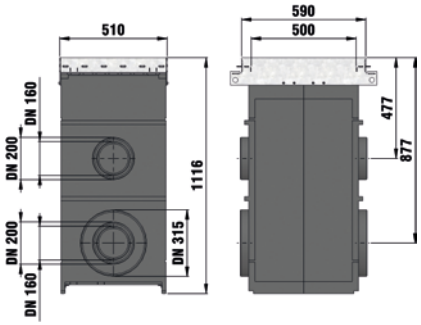

Trash box with ductile iron grating
SW 3 x 140/20 mm, class E 600,
up to type 8000

Trash box connector
incl. assembling,
RECYFIX HICAP F 1000

Adapter plate
with assembling set,
for shaft construction,
Type 1000

	Length mm	Width mm	Height mm	Weight kg	Item-No. galvanised	Item-No. stainless steel
Trash box with ductile iron grating SW 3 x 140/20 mm, class E 600, up to type 8000	510	590	1116	101,00	16500	32191
Trash box with ductile iron solid grating, class E 600, up to type 8000	510	590	1116	103,50	16505	32192
Trash box with ductile iron grating SW 3 x 140/20 mm, class F 900, up to type 8000	510	590	1116	101,84	32695	32696
Trash box connector incl. assembling, RECYFIX HICAP F 1000	-	-	-	2,73	881	-
Shaft for channel connection up to type 10000	1120	1120	880	54,00	32000	-
Compensating ring, class D 400	608	608	110	16,18	32885	-
Compensating ring, class F 900	608	608	210	20,98	32001	-
Shaft cover, class D 400	850	850	100	105,00	32886	-
Shaft cover, class F 900	850	850	-	-	32167	-
Adapter plate with assembling set, for shaft construction, Type 1000	-	590	268	-	10153	-

RECYFIX®HICAP®F 2000

RECYFIX®HICAP®F 2000 up to load class D 400

Type 2200, ductile iron slot 6 mm, 1,0 m

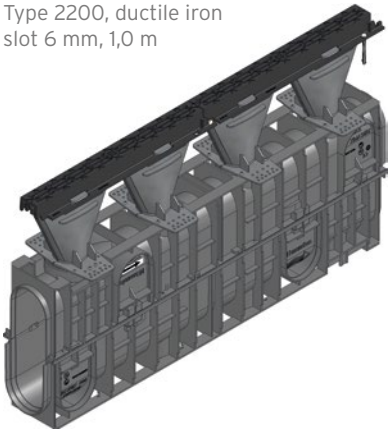

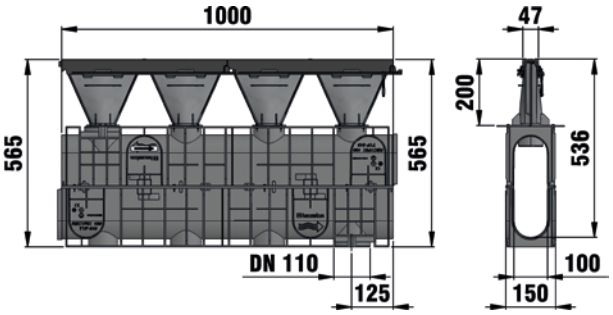

Type 2200, stainless steel design grating WAVE 6 mm, 1,0 m

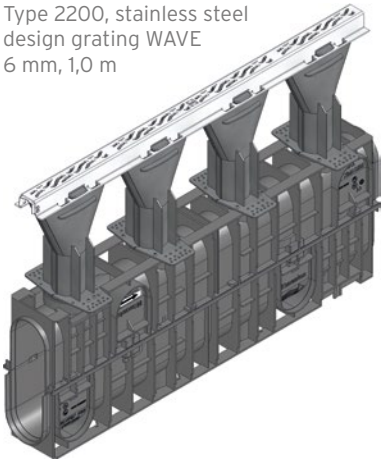

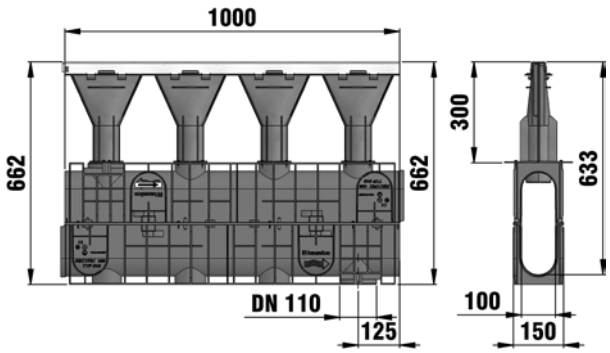

	Length mm	Width mm	Height mm	Internal channel cross-sect. cm²	Intake cross-sect. cm²/m	Funnel H mm	Weight kg	Item No.
Type 2200, ductile iron slot 6 mm, 1,0 m	1000	150	565	284	129	200	13,20	13010
Type 2200, stainless steel design grating WAVE 6 mm, 1,0 m	1000	150	562	284	44	200	10,41	13022

RECYFIX®HICAP®F 2000

RECYFIX®HICAP®F 2000 up to load class E 600

Type 2200, stainless steel slot 24 mm, 1,0 m

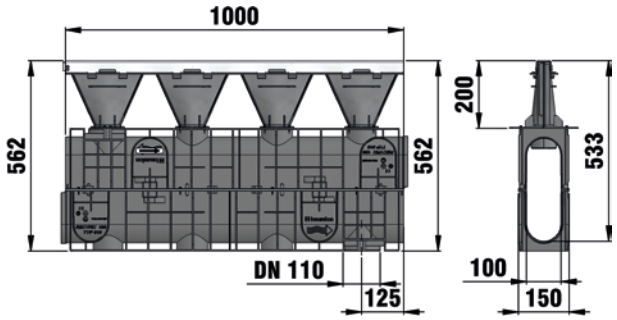

	Length mm	Width mm	Height mm	Internal channel cross-sect. cm²	Intake cross-sect. cm²/m	Funnel H mm	Weight kg	Item No.
Type 2200, stainless steel slot 24 mm, 1,0 m	1000	150	562	284	211	200	10,21	13024

RECYFIX®HICAP®F 2000 up to load class F 900

Type 2200, ductile iron mesh 13/28 mm, 1,0 m

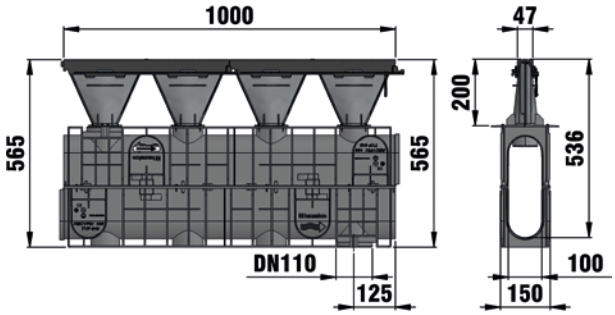

	Length mm	Width mm	Height mm	Internal channel cross-sect. cm²	Intake cross-sect. cm²/m	Funnel H mm	Weight kg	Item No.
Type 2200, ductile iron mesh 13/28 mm, 1,0 m	1000	150	565	284	168	200	13,10	13020
Type 2200, ductile iron slot 28 mm, 1,0 m	1000	150	565	284	247	200	11,14	13030
Type 2200, ductile iron slot 14 mm, 1,0 m	1000	150	565	284	123	200	11,51	13028

RECYFIX®HICAP®F 2000

RECYFIX®HICAP®F 2000, Accessories

End cap closed, galvanised, type 2000

End cap with PVC-U pipe outlet DN/OD 110, galvanised, type 2000

Step-fall ramp, stainless steel, from RECYFIX HICAP 2000 to RECYFIX HICAP 1000

	Length mm	Width mm	Height mm	Weight kg	Item No.
End cap closed, galvanised, type 2000	-	140	350	0,77	13012
End cap with PVC-U pipe outlet DN/OD 110, galvanised, type 2000	-	140	350	2,00	13015
Step-fall connector from RECYFIX HICAP F 2000 to RECYFIX HICAP F 1000	-	179	362	1,00	13019
Step-fall ramp, stainless steel, from RECYFIX HICAP F 2000 to RECYFIX HICAP F 1000	99	97	95	0,25	13195
Chamber connector for RECYFIX HICAP F 2000, 1 m	1000	150	362	5,09	13091

RECYFIX®HICAP®F 2000

RECYFIX®HICAP®F Trash boxes

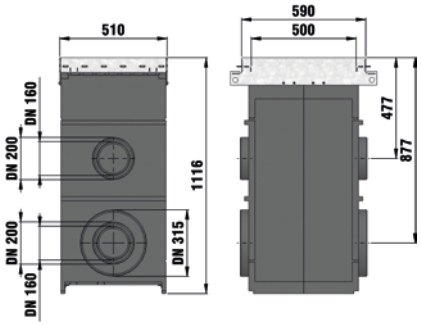

Trash box with ductile iron grating
SW 3 x 140/20 mm, class E 600,
up to type 8000

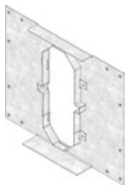

Trash box connector
incl. assembling,
RECYFIX HICAP F 2000

Adapter plate
with assembling set,
for shaft construction,
Type 2000

	Length mm	Width mm	Height mm	Weight kg	Item-No. galvanised	Item-No. stainless steel
Trash box with ductile iron grating SW 3 x 140/20 mm, class E 600, up to type 8000	510	590	1116	101,00	16500	32191
Trash box with ductile iron solid grating, class E 600, up to type 8000	510	590	1116	103,50	16505	32192
Trash box with ductile iron grating SW 3 x 140/20 mm, class F 900, up to type 8000	510	590	1116	101,84	32695	32696
Trash box connector incl. assembling, RECYFIX HICAP F 2000	-	-	-	4,10	882	-
Shaft for channel connection up to type 10000	1120	1120	880	54,00	32000	-
Compensating ring, class D 400	608	608	110	16,18	32885	-
Compensating ring, class F 900	608	608	210	20,98	32001	-
Shaft cover, class D 400	850	850	100	105,00	32886	-
Shaft cover, class F 900	850	850	-	-	32167	-
Adapter plate with assembling set, for shaft construction, Type 2000	-	590	370	-	10154	-

RECYFIX®HICAP®F 3000

RECYFIX®HICAP®F 3000 up to load class D 400

Type 3200, ductile iron slot 6 mm, 1,0 m

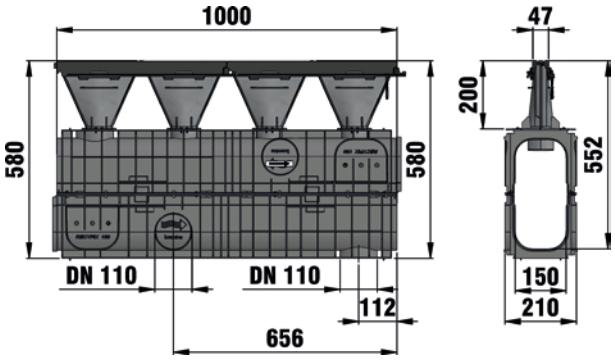

Type 3200, stainless steel design grating WAVE 6 mm, 1,0 m

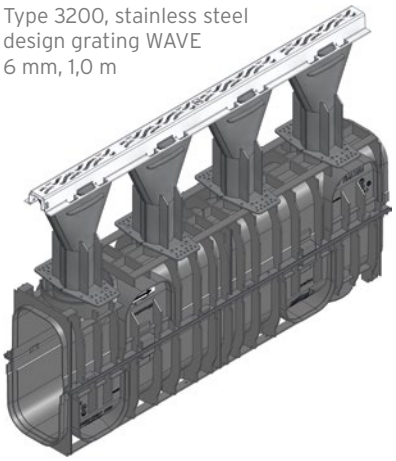

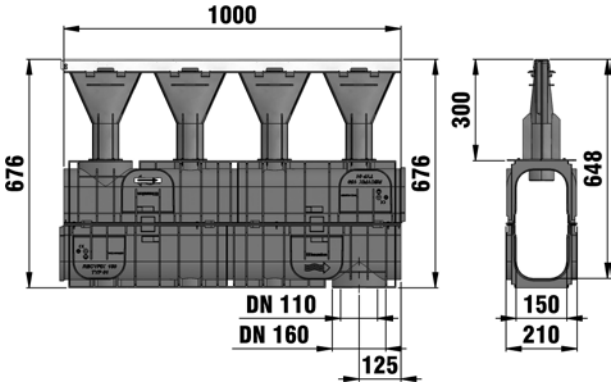

	Length mm	Width mm	Height mm	Internal channel cross-sect. cm²	Intake cross-sect. cm²/m	Funnel H mm	Weight kg	Item No.
Type 3200, ductile iron slot 6 mm, 1,0 m	1000	210	580	460	129	200	12,50	13210
Type 3200, stainless steel design grating WAVE 6 mm, 1,0 m	1000	210	576	460	44	200	10,43	13222

RECYFIX®HICAP®F 3000

RECYFIX®HICAP®F 3000 up to load class E 600

Type 3200, stainless steel slot 24 mm, 1,0 m

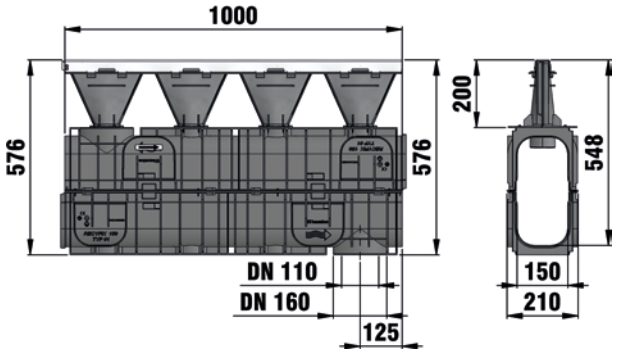

	Length mm	Width mm	Height mm	Internal channel cross-sect. cm²	Intake cross-sect. cm²/m	Funnel H mm	Weight kg	Item No.
Type 3200, stainless steel slot 24 mm, 1,0 m	1000	210	576	460	211	200	10,23	13224

RECYFIX®HICAP®F 3000 up to load class F 900

Type 3200, ductile iron mesh 13/28 mm, 1,0 m

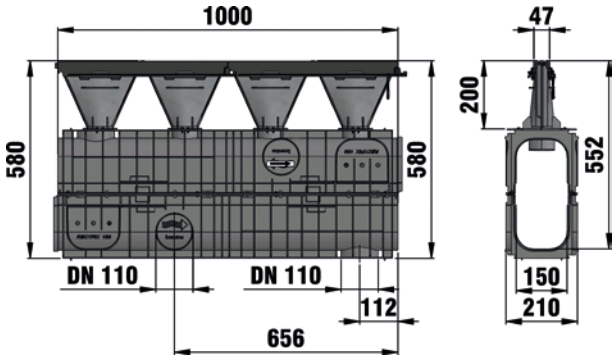

	Length mm	Width mm	Height mm	Internal channel cross-sect. cm²	Intake cross-sect. cm²/m	Funnel H mm	Weight kg	Item No.
Type 3200, ductile iron mesh 13/28 mm, 1,0 m	1000	210	580	460	172	200	12,40	13220
Type 3200, ductile iron slot 28 mm, 1,0 m	1000	210	580	460	248	200	11,29	13230
Type 3200, ductile iron slot 14 mm, 1,0 m	1000	210	580	460	124	200	12,00	13225

RECYFIX®HICAP®F 3000

RECYFIX®HICAP®F 3000, Accessories

End cap closed, galvanised, type 3000

End cap with PVC-U pipe outlet DN/OD 160, galvanised, type 3000

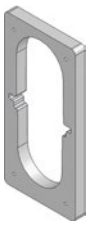

Step-fall connector from RECYFIX HICAP 3000 to RECYFIX HICAP 2000

	Length mm	Width mm	Height mm	Weight kg	Item No.
End cap closed, galvanised, type 3000	-	190	370	1,10	13212
End cap with PVC-U pipe outlet DN/OD 160, galvanised, type 3000	-	190	370	2,40	13215
Step-fall connector from RECYFIX HICAP F 3000 to RECYFIX HICAP F 2000	-	179	376	2,00	13017
Chamber connector for RECYFIX HICAP F 3000, 1 m	1000	210	376	5,61	13291

RECYFIX®HICAP®F 3000

RECYFIX®HICAP®F Trash boxes

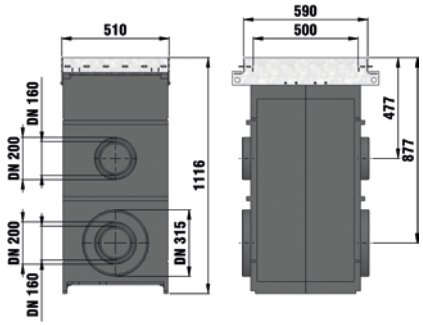

Trash box with ductile iron grating SW 3 x 140/20 mm, class E 600, up to type 8000

Trash box connector incl. assembling, RECYFIX HICAP F 3000

Adapter plate with assembling set, for shaft construction, Type 3000

	Length mm	Width mm	Height mm	Weight kg	Item-No. galvanised	Item-No. stainless steel
Trash box with ductile iron grating SW 3 x 140/20 mm, class E 600, up to type 8000	510	590	1116	101,00	16500	32191
Trash box with ductile iron solid grating, class E 600, up to type 8000	510	590	1116	103,50	16505	32192
Trash box with ductile iron grating SW 3 x 140/20 mm, class F 900, up to type 8000	510	590	1116	101,84	32695	32696
Trash box connector incl. assembling, RECYFIX HICAP F 3000	-	-	-	3,90	884	-
Shaft for channel connection up to type 10000	1120	1120	880	54,00	32000	-
Compensating ring, class D 400	608	608	110	16,18	32885	-
Compensating ring, class F 900	608	608	210	20,98	32001	-
Shaft cover, class D 400	850	850	100	105,00	32886	-
Shaft cover, class F 900	850	850	-	-	32167	-
Adapter plate with assembling set, for shaft construction, Type 3000	-	590	384	-	10155	-

RECYFIX®HICAP®F 5000

RECYFIX®HICAP®F 5000 up to load class D 400

Type 5200, ductile iron slot 6 mm, 1,0 m

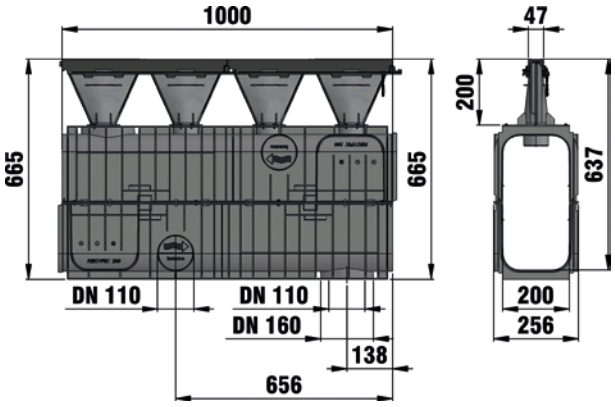

Type 5200, stainless steel design grating WAVE 6 mm, 1,0 m

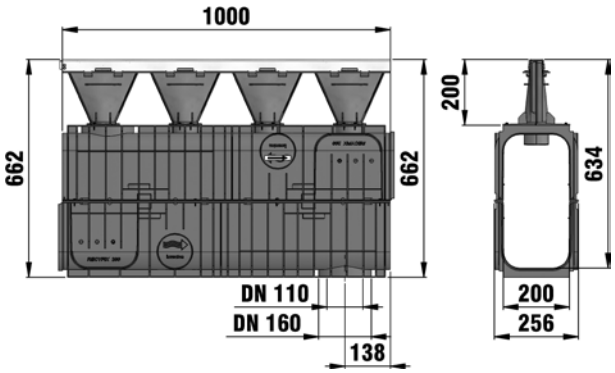

	Length mm	Width mm	Height mm	Internal channel cross-sect. cm²	Intake cross-sect. cm²/m	Funnel H mm	Weight kg	Item No.
Type 5200, ductile iron slot 6 mm, 1,0 m	1000	256	665	790	129	200	14,00	13410
Type 5200, stainless steel design grating WAVE 6 mm, 1,0 m	1000	256	662	790	44	200	11,83	13422
Inspection element complete with ductile iron grating SW 150/18 mm, KTL-coated, 1,0 m	1000	256	665	394	-	37,31	37,31	13807

RECYFIX®HICAP®F 5000

RECYFIX®HICAP®F 5000 up to load class E 600

Type 5200, stainless steel slot 24 mm, 1,0 m

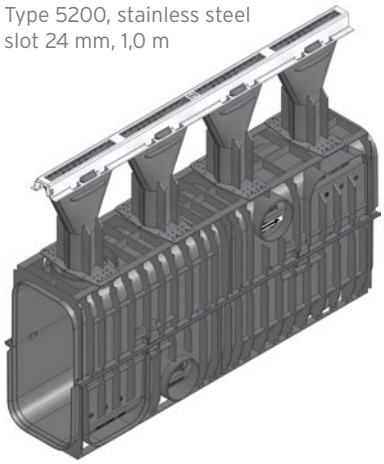

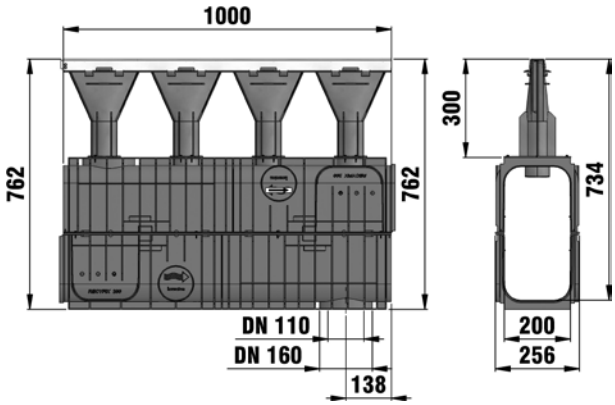

	Length mm	Width mm	Height mm	Internal channel cross-sect. cm²	Intake cross-sect. cm²/m	Funnel H mm	Weight kg	Item No.
Type 5200, stainless steel slot 24 mm, 1,0 m	1000	256	662	790	211	200	11,63	13424
Inspection element complete with ductile iron grating, closed, KTL-coated, 1,0 m	1000	256	665	394	-	37,31	37,31	13776

RECYFIX®HICAP®F 5000 up to load class F 900

Type 5200, ductile iron mesh 13/28 mm, 1,0 m

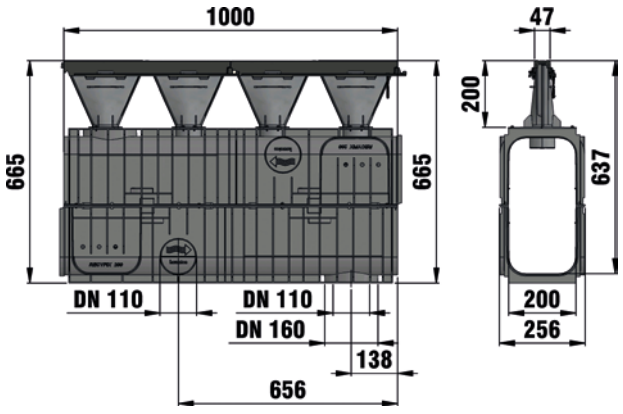

	Length mm	Width mm	Height mm	Internal channel cross-sect. cm²	Intake cross-sect. cm²/m	Funnel H mm	Weight kg	Item No.
Type 5200, ductile iron mesh 13/28 mm, 1,0 m	1000	256	665	790	172	200	13,90	13420
Type 5200, ductile iron slot 28 mm, 1,0 m	1000	256	665	790	248	200	12,61	13430
Type 5200, ductile iron slot 14 mm, 1,0 m	1000	256	665	790	124	200	13,50	13425
Inspection element complete with ductile iron grating SW 150/20 mm, KTL-coated, 1,0 m	1000	256	665	394	710	36,56	36,56	13778

RECYFIX®HICAP®F 5000

RECYFIX®HICAP®F 5000, Accessories

End cap closed, galvanised, type 5000

End cap with PVC-U pipe outlet DN/OD 200, galvanised, type 5000

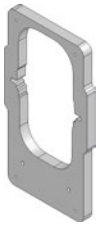

Step-fall connector from RECYFIX HICAP 5000 to RECYFIX HICAP 3000

	Length mm	Width mm	Height mm	Weight kg	Item No.
End cap closed, galvanised, type 5000	-	240	450	2,00	13412
End cap with PVC-U pipe outlet DN/OD 200, galvanised, type 5000	-	240	450	2,10	13415
Step-fall connector from RECYFIX HICAP F 5000 to RECYFIX HICAP F 3000	-	250	462	0,99	13217
Step-fall ramp, stainless steel, from RECYFIX HICAP F 5000 to RECYFIX HICAP F 3000	84	197	80	0,48	13295
Chamber connector for RECYFIX HICAP F 5000, 1 m	1000	256	462	7,01	13491

RECYFIX®HICAP®F 5000

RECYFIX®HICAP®F Trash boxes

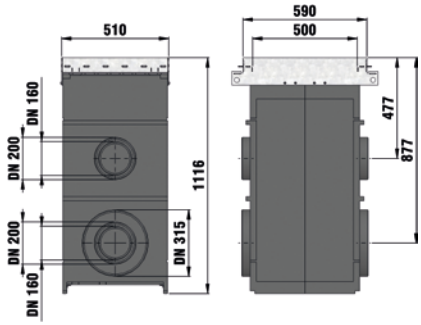

Trash box with ductile iron grating SW 3 x 140/20 mm, class E 600, up to type 8000

Trash box connector incl. assembling, RECYFIX HICAP F 5000

Adapter plate with assembling set, for shaft construction, Type 5000

	Length mm	Width mm	Height mm	Weight kg	Item-No. galvanised	Item-No. stainless steel
Trash box with ductile iron grating SW 3 x 140/20 mm, class E 600, up to type 8000	510	590	1116	101,00	16500	32191
Trash box with ductile iron solid grating, class E 600, up to type 8000	510	590	1116	103,50	16505	32192
Trash box with ductile iron grating SW 3 x 140/20 mm, class F 900, up to type 8000	510	590	1116	101,84	32695	32696
Trash box connector incl. assembling, RECYFIX HICAP F 5000	-	-	-	3,80	886	-
Shaft for channel connection up to type 10000	1120	1120	880	54,00	32000	-
Compensating ring, class D 400	608	608	110	16,18	32885	-
Compensating ring, class F 900	608	608	210	20,98	32001	-
Shaft cover, class D 400	850	850	100	105,00	32886	-
Shaft cover, class F 900	850	850	-	-	32167	-
Adapter plate with assembling set, for shaft construction, Type 5000	-	590	470	-	10156	-

RECYFIX®HICAP®F 8000

RECYFIX®HICAP®F 8000 up to load class D 400

Type 8200, ductile iron slot 6 mm, 1,0 m

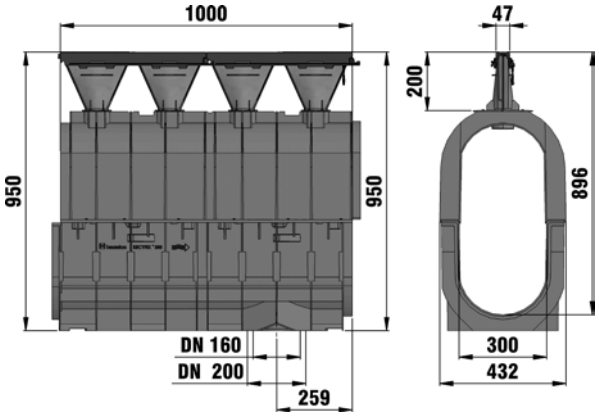

Type 8200, stainless steel design grating WAVE 6 mm, 1,0 m

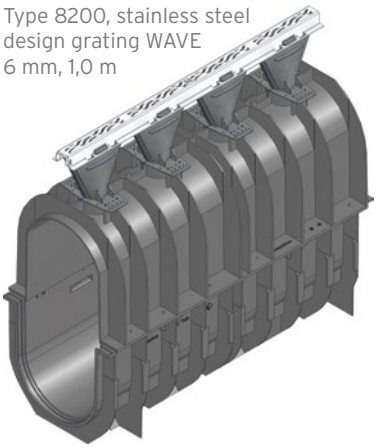

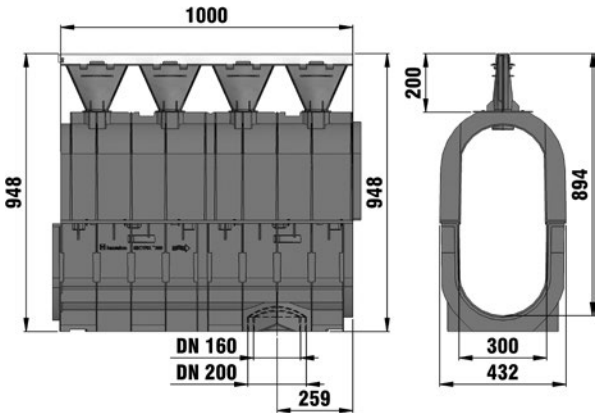

		Length mm	Width mm	Height mm	Internal channel cross-sect. cm²	Intake cross-sect. cm²/m	Funnel H mm	Weight kg	Item No.
	Type 8200, ductile iron slot 6 mm, 1,0 m	1000	432	950	1714	129	200	24,00	13610
	Type 8200, stainless steel design grating WAVE 6 mm, 1,0 m	1000	432	948	1714	44	200	20,60	13622
NEW	Type 8300, ductile iron slot 6 mm, 1,0 m	1000	432	1050	1714	129	300	24,20	13660
NEW	Type 8300, stainless steel design grating WAVE 6 mm, 1,0 m	1000	432	1048	1714	78	300	20,64	13672
	Inspection element complete with ductile iron grating SW 150/18 mm, KTL-coated, 1,0 m	1000	420	950	1714	624	-	48,78	13808

RECYFIX®HICAP®F 8000

RECYFIX®HICAP®F 8000 up to load class E 600

Type 8200, ductile iron mesh 13/28 mm, 1,0 m

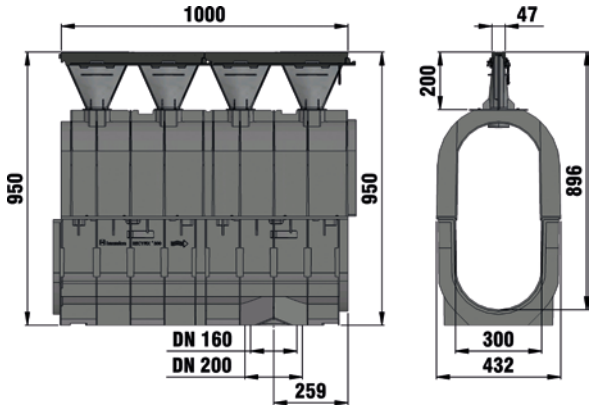

		Length mm	Width mm	Height mm	Internal channel cross-sect. cm²	Intake cross-sect. cm²/m	Funnel H mm	Weight kg	Item No.
	Type 8200, stainless steel slot 24 mm, 1,0 m	1000	432	948	1714	211	200	20,40	13624
NEW	Type 8300, stainless steel slot 24 mm, 1,0 m	1000	432	1048	1714	211	300	22,44	13674
	Inspection element complete with ductile iron grating, closed, KTL-coated, 1,0 m	1000	-	-	1714	-	-	48,78	13781
NEW	Inspection element complete with ductile iron grating, closed, KTL coated, 1,0 m	1000	420	1050	1714	-	-	56,73	13782

RECYFIX®HICAP®F 8000 up to load class F 900

Type 8300, ductile iron mesh 13/28 mm, 1,0 m

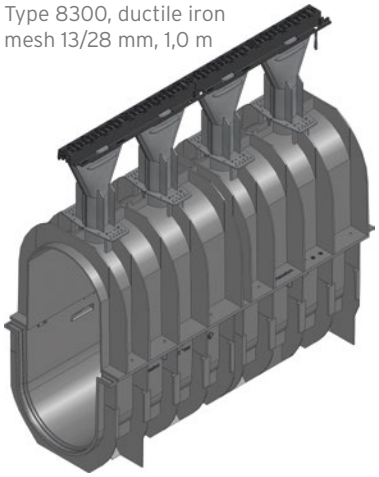

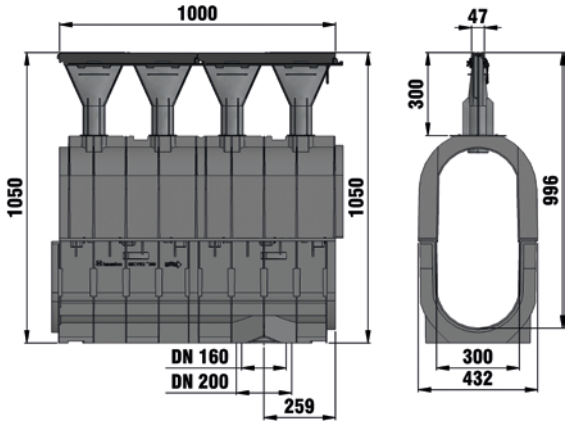

		Length mm	Width mm	Height mm	Internal channel cross-sect. cm²	Intake cross-sect. cm²/m	Funnel H mm	Weight kg	Item No.
NEW	Type 8200, ductile iron mesh 13/28 mm, 1,0 m	1000	432	950	1714	172	200	23,90	13620
NEW	Type 8200, ductile iron slot 28 mm, 1,0 m	1000	432	950	1714	248	200	21,64	13630
NEW	Type 8200, ductile iron slot 14 mm, 1,0 m	1000	432	950	1714	124	200	23,50	13625
	Type 8300, ductile iron mesh 13/28 mm, 1,0 m	1000	432	1050	1714	172	300	24,10	13670
	Type 8300, ductile iron slot 28 mm, 1,0 m	1000	432	1050	1714	248	300	22,24	13680
	Type 8300, ductile iron slot 14 mm, 1,0 m	1000	432	1050	1714	124	300	23,77	13675
NEW	Inspection element complete with ductile iron grating SW 150/20 mm, closed, KTL coated, 1,0 m	1000	420	950	1714	710	-	48,00	13783
	Inspection element complete with ductile iron grating SW 150/20 mm, KTL-coated, 1,0 m	1000	420	-	-	710	55,98	55,98	13784

RECYFIX®HICAP®F 8000

RECYFIX®HICAP®F 8000, Accessories

End cap closed, galvanised, type 8000

End cap with PVC-U pipe outlet DN/OD 200, galvanised, type 8000

Step-fall connector from R HICAP 8000 to RECYFIX HICAP 5000

	Length mm	Width mm	Height mm	Weight kg	Item No.
End cap closed, galvanised, type 8000	-	420	720	3,00	13612
End cap with PVC-U pipe outlet DN/OD 200, galvanised, type 8000	-	420	734	5,60	13615
Step-fall connector from RECYFIX HICAP F 8000 to RECYFIX HICAP F 5000	-	432	693	2,00	13417
Step-fall ramp, stainless steel, from RECYFIX HICAP F 8000 to RECYFIX HICAP F 5000	258	291	254	1,95	13695
Chamber connector for RECYFIX HICAP F 8000, 1 m	1000	432	748	15,86	13691

RECYFIX®HICAP®F 8000

RECYFIX®HICAP®F Trash boxes

Trash box with ductile iron grating SW 3 x 140/20 mm, class E 600, up to type 8000

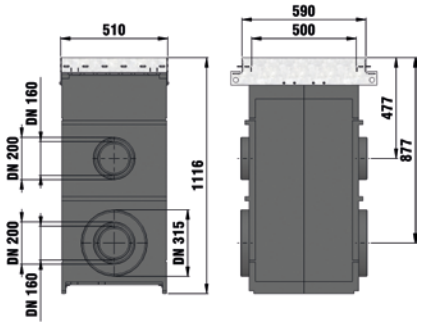

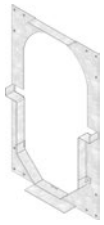

Trash box connector incl. assembling, RECYFIX HICAP F 8000

Adapter plate with assembling set, for shaft construction, Type 5000

	Length mm	Width mm	Height mm	Weight kg	Item-No. galvanised	Item-No. stainless steel
Trash box with ductile iron grating SW 3 x 140/20 mm, class E 600, up to type 8000	510	590	1116	101,00	16500	32191
Trash box with ductile iron solid grating, class E 600, up to type 8000	510	590	1116	103,50	16505	32192
Trash box with ductile iron grating SW 3 x 140/20 mm, class F 900, up to type 8000	510	590	1116	101,84	32695	32696
Trash box connector incl. assembling, RECYFIX HICAP F 8000	-	-	-	4,70	888	-
Shaft for channel connection up to type 10000	1120	1120	880	54,00	32000	-
Compensating ring, class D 400	608	608	110	16,18	32885	-
Compensating ring, class F 900	608	608	210	20,98	32001	-
Shaft cover, class D 400	850	850	100	105,00	32886	-
Shaft cover, class F 900	850	850	-	-	32167	-
Adapter plate with assembling set, for shaft construction, Type 8000	-	590	756	-	10157	-

RECYFIX®HICAP®F 10000

RECYFIX®HICAP®F 10000 up to load class D 400

Type 10200, ductile iron
slot 6 mm, 1,14 m

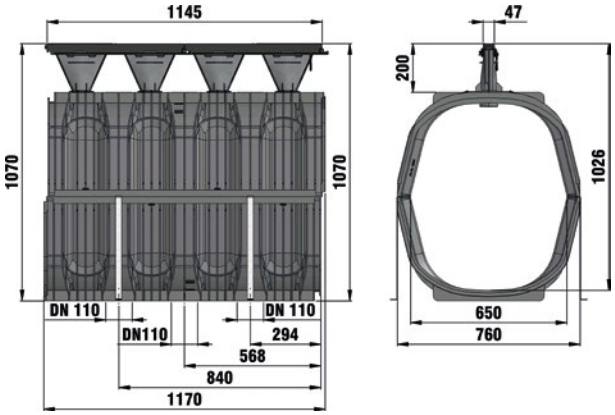

Type 10200, stainless steel
design grating WAVE
6 mm, 1,14 m

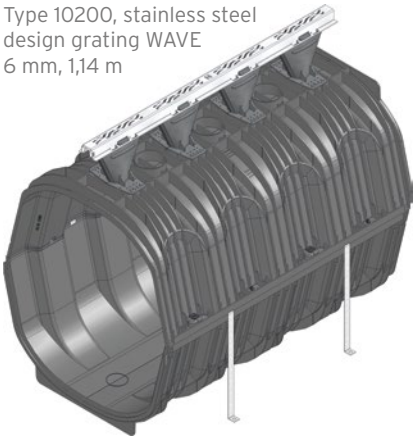

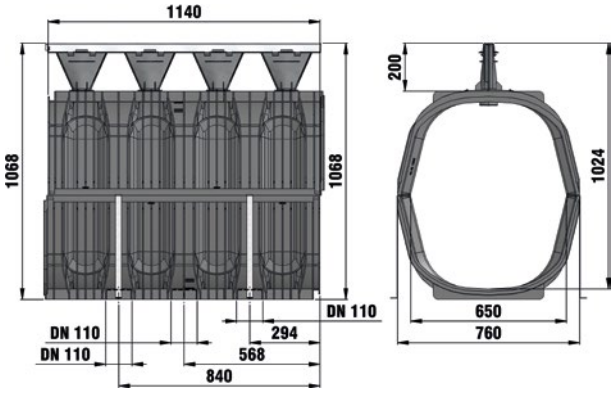

		Length mm	Width mm	Height mm	Internal channel cross-sect. cm²	Intake cross-sect. cm²/m	Funnel H mm	Weight kg	Item No.
	Type 10200, ductile iron slot 6 mm, 1,14 m	1145	760	1070	4430	129	200	31,88	13810
	Type 10200, stainless steel design grating WAVE 6 mm, 1,14 m	1140	760	1068	4430	44	200	17,24	13822
NEW	Type 10300, slot 6 mm	1145	760	1170	4430	129	300	32,49	13860
NEW	Type 10300, stainless steel design grating WAVE 6 mm, 1,14 m	1140	760	1068	4430	68	300	17,28	13872
	Inspection element complete with ductile iron grating SW 3 x 140/18 mm, KTL-coated, 1,0 m	1145	760	1070	4126	1810	-	88,63	13809

RECYFIX®HICAP®F 10000

RECYFIX®HICAP®F 10000 up to load class E 600

Type 10300, stainless steel slot 24 mm, 1,14 m

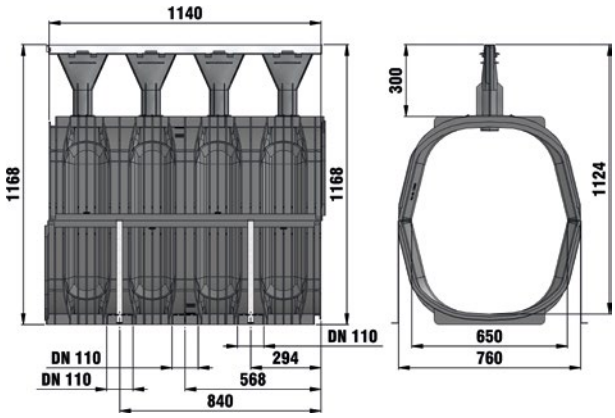

		Length mm	Width mm	Height mm	Internal channel cross-sect. cm²	Intake cross-sect. cm²/m	Funnel H mm	Weight kg	Item No.
NEW	Type 10200, stainless steel slot 24 mm	1140	760	1068	4430	211	200	17,04	13824
	Type 10300, stainless steel slot 24 mm, 1,14 m	1140	760	1168	4430	211	300	17,08	13874
	Inspection element complete with ductile iron grating, closed, KTL-coated, 1,14 m	1145	760	1070	4126	-	-	88,63	13785
NEW	Inspection element complete with ductile iron grating, closed, KTL coated, 1,14 m	1145	760	1170	4126	-	-	91,14	13786

RECYFIX®HICAP®F 10000

RECYFIX®HICAP®F 10000 up to load class F 900

Type 10300, ductile iron slot 14 mm

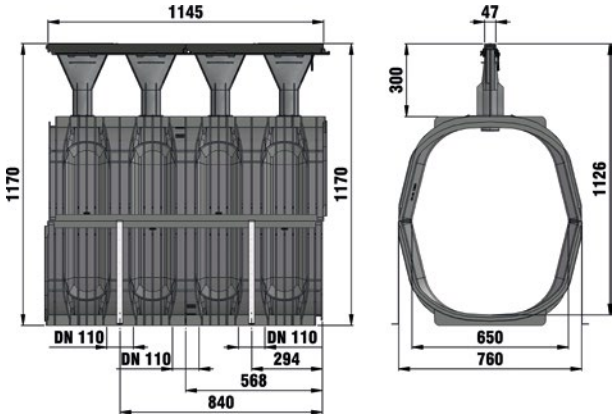

		Length mm	Width mm	Height mm	Internal channel cross-sect. cm²	Intake cross-sect. cm²/m	Funnel H mm	Weight kg	Item No.
NEW	Type 10200, ductile iron mesh 13/28 mm, 1,14 m	1145	760	1070	4430	168	200	31,00	13820
NEW	Type 10200, ductile iron slot 28 mm, 1,14 m	1145	760	1070	4430	247	200	30,54	13830
NEW	Type 10200, ductile iron slot 14 mm, 1,14 m	1145	760	1070	4430	123	200	31,57	13840
	Type 10300, ductile iron mesh 13/28 mm, 1,14 m	1145	760	1170	4430	168	300	31,20	13870
	Type 10300, ductile iron slot 28 mm	1145	760	1170	4430	247	300	31,18	13880
	Type 10300, ductile iron slot 14 mm	1145	760	1170	4430	123	300	32,17	13885
NEW	Inspection element complete with ductile iron grating SW 3 x 140/20 mm, KTL coated, 1,14 m	1145	760	1070	4126	2059	-	86,89	13787
	Inspection element complete with ductile iron grating SW 3 x 140/20 mm, KTL-coated, 1,14 m	1145	760	1070	4126	2059	-	89,40	13788

RECYFIX®HICAP®F 10000

RECYFIX®HICAP®F 10000, Accessories

Step-fall connector
from RECYFIX HICAP 10000
to RECYFIX HICAP 8000

Step-fall ramp, stainless steel,
from RECYFIX HICAP 10000
to RECYFIX HICAP 8000

	Length mm	Width mm	Height mm	Weight kg	Item No.
end cap, black, incl. assembly set	-	803	822	4,42	96002
Step-fall connector from RECYFIX HICAP F 10000 to RECYFIX HICAP F 8000	-	760	845	5,00	13617
Step-fall ramp, stainless steel, from RECYFIX HICAP F 10000 to RECYFIX HICAP F 8000	280	686	255	4,32	13895
Chamber connector for RECYFIX HICAP F 10000, 1 m	1145	760	868	23,11	13891