SERVICE CHANNEL

Accessible, floor-mounted system for temporary or permanent organisation and management of supply and information cables.

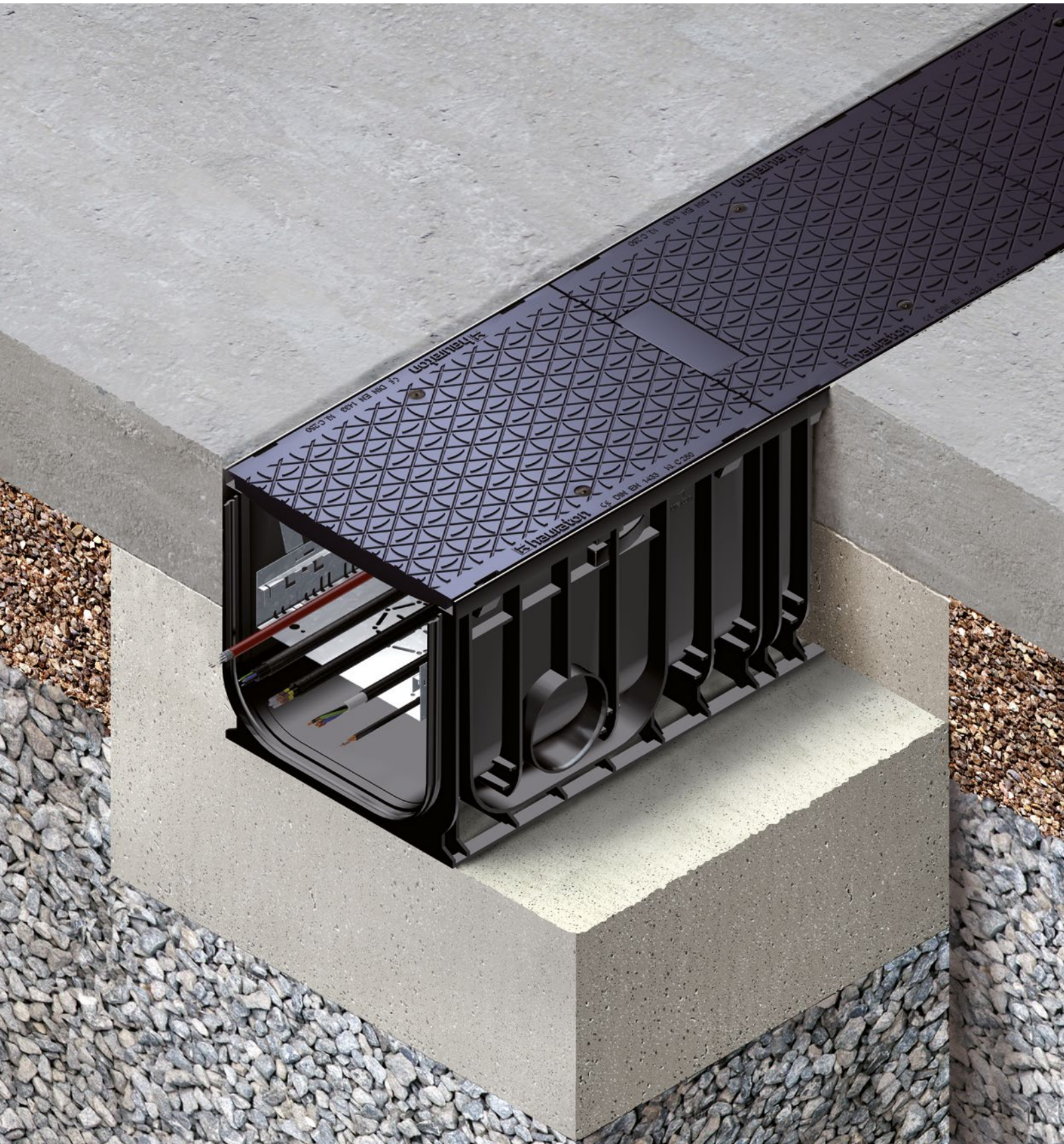

SERVICE CHANNEL

Accessible, floor-mounted system for temporary or permanent organisation and management of supply and information cables.

1 Requirements

Ground installed SERVICE CHANNELS have to:

- ensure a temporary or permanent operation
- withstand daily changing requirements under extreme loads
- offer a quick, easy and flexible installation
- allow quick access everywhere
- make the cable routing invisible

2 Application areas

- exhibition halls
- production workshops
- stadiums

3 Solutions

The SERVICE CHANNEL System is a tried-and-tested solution for a variety of applications. It offers:

- channel systems made of high-quality materials such as fibre reinforced concrete or 100% recycled composite for maximum stability and security
- a simple installation with various connection possibilities like T- and corner-connections for cost savings and flexibility
- inside cable routing for an attractive overall appearence with a large internal cross-section and optionally available cable-routing system

Henryk-Reyman-Stadium in Krakow, Poland

Warsaw Spire Office Building in Warsaw, Poland

Volvo prototype factory in Wrocław, Poland

Production Workshop RULMECA in Aschersleben, Germany

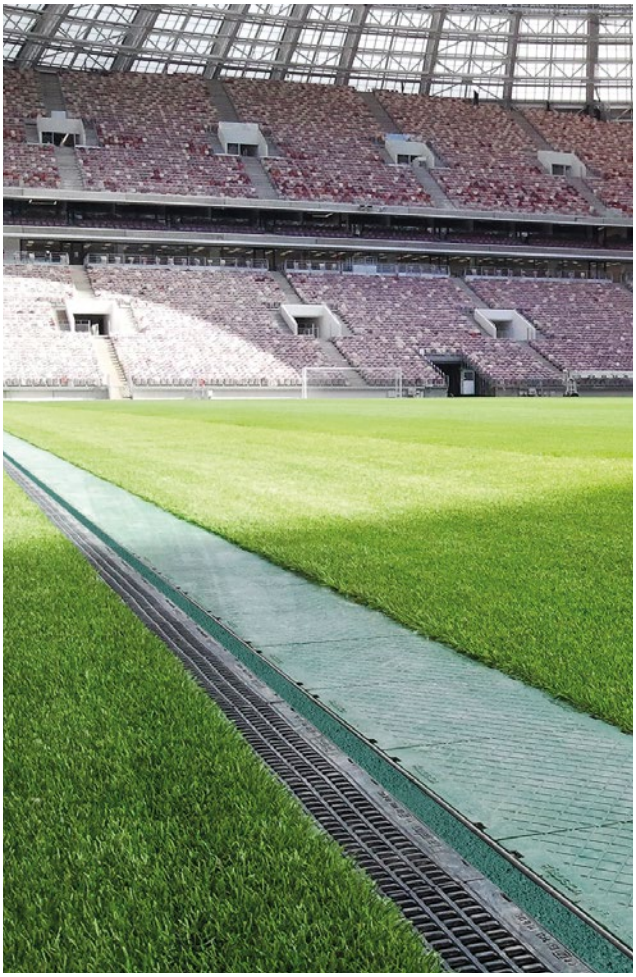

Luschniki-Stadium in Moscow, Russia

IDEAL FOR ...

ground installed cable routing applications which are easily accessible at all times.

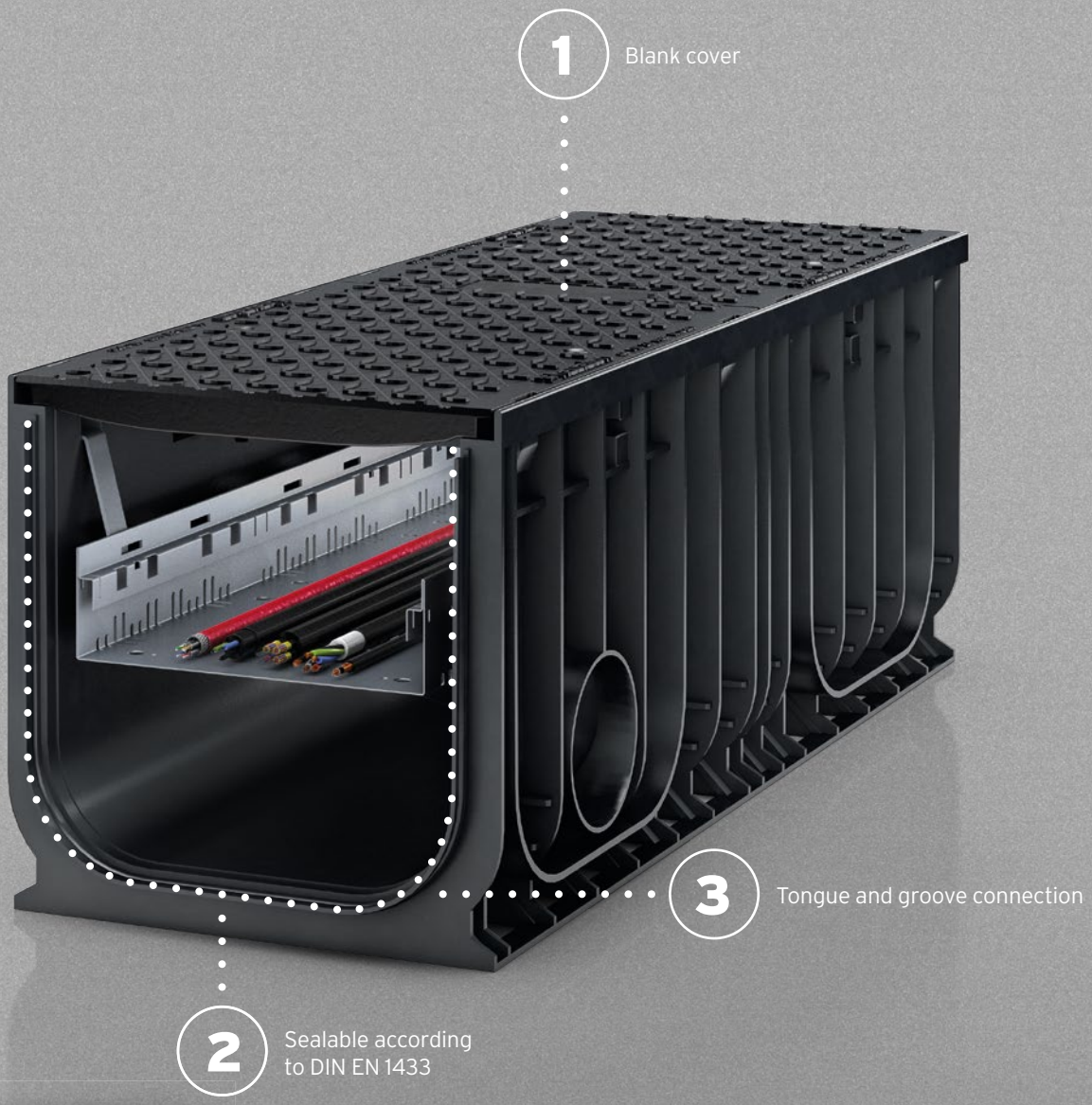

100 % corrosion-free

SERVICE CHANNEL RECYFIX PRO

Accessible, floor-mounted system for temporary or permanent organisation and management of supply and information cables.

SERVICE CHANNEL RECYFIX PRO channels meet the requirements of DIN EN 1433 and are suitable for the following load categories:

	Category A 15, Load class 15 kN
	Category B 125, Load class 125 kN
	Category C 250, Load class 250 kN

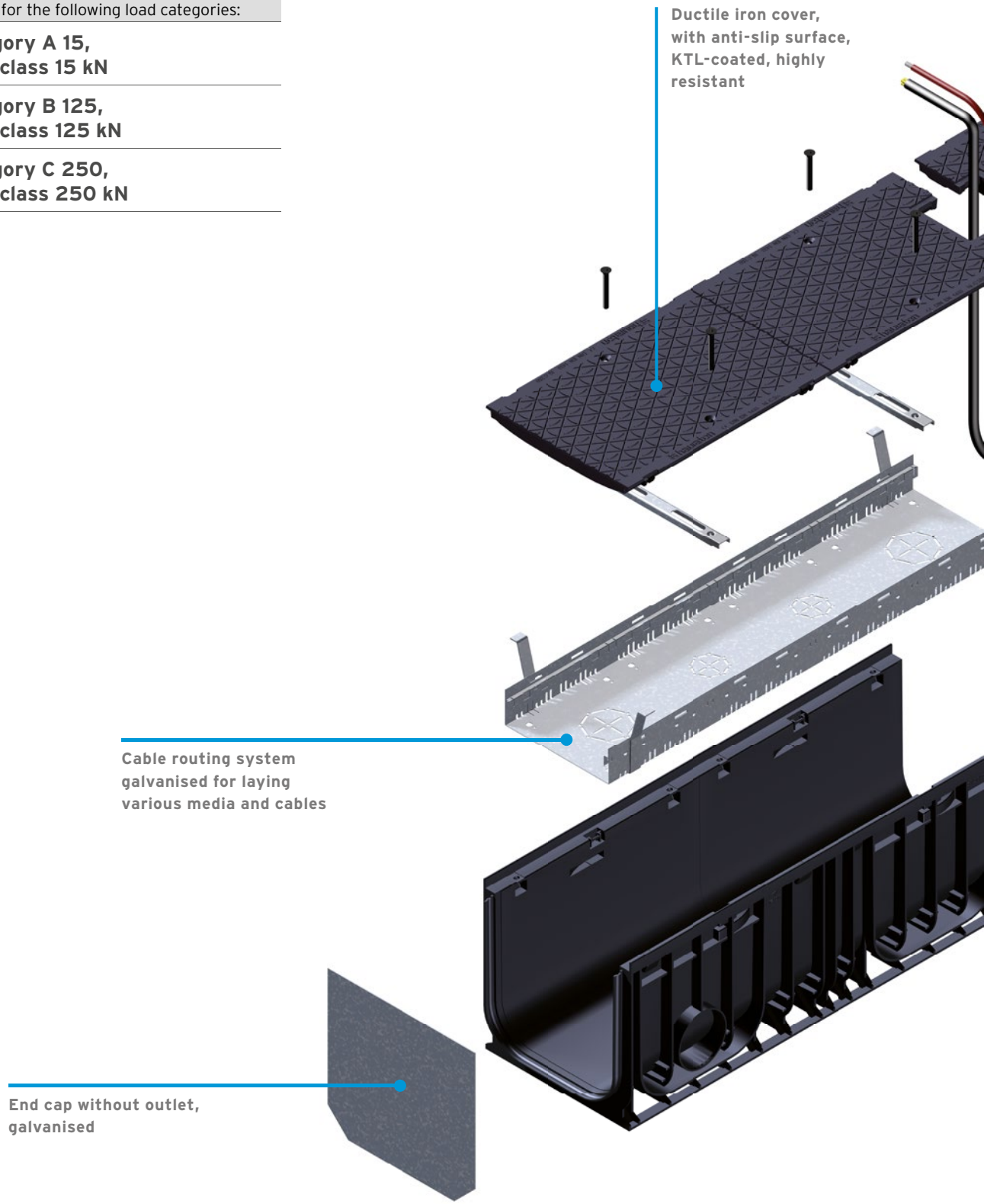

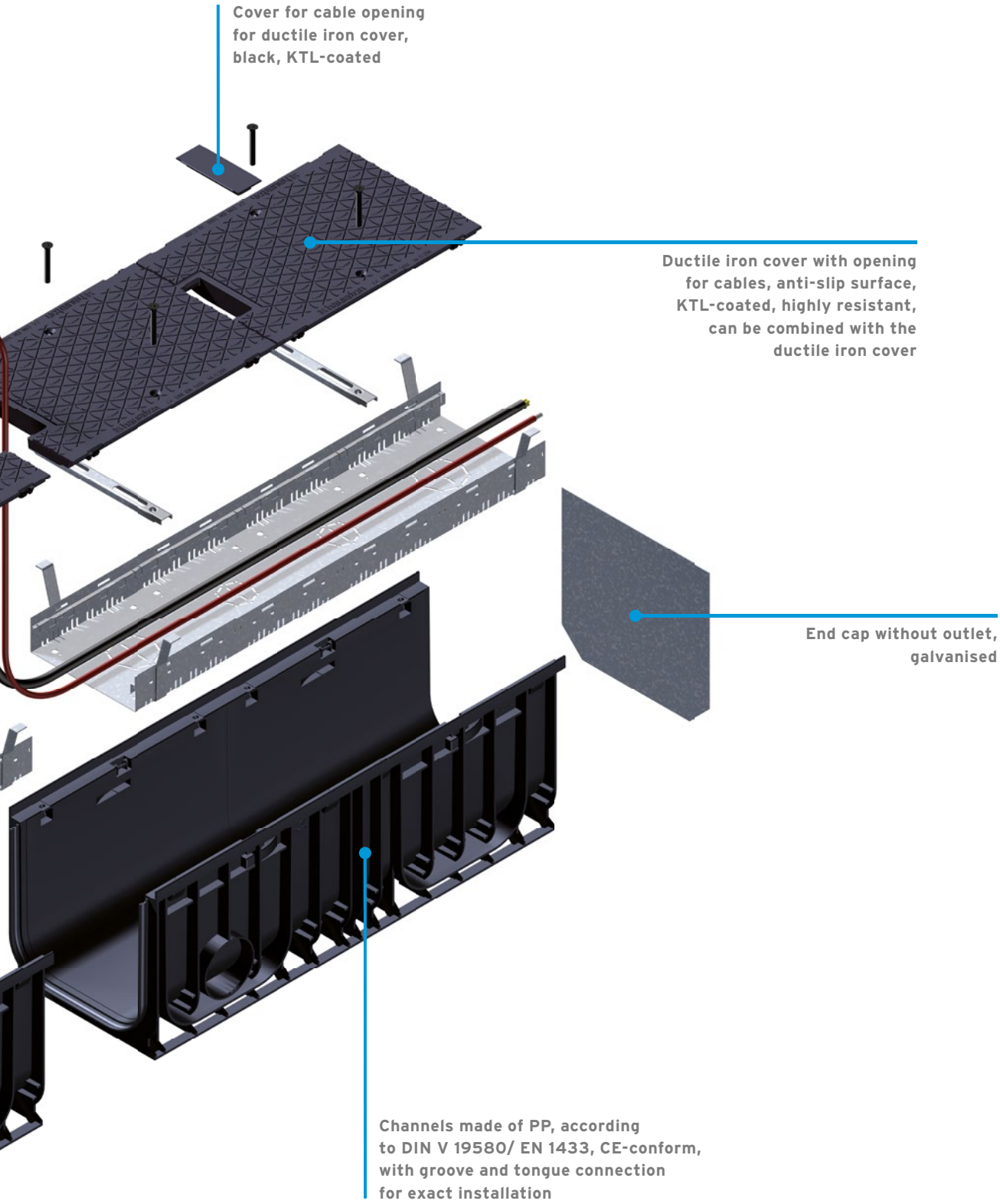
Cover for cable opening
for ductile iron cover,
black, KTL-coated
Ductile iron cover with opening
for cables, anti-slip surface,
KTL-coated, highly resistant,
can be combined with the
ductile iron cover
End cap without outlet,
galvanised
Channels made of PP, according
to DIN V 19580/ EN 1433, CE-conform,
with groove and tongue connection
for exact installation

RECYCLABLE.
LIGHT.
RELIABLE.

Ideal for:

Floor-mounted cable routing applications which are easily accessible at all times.

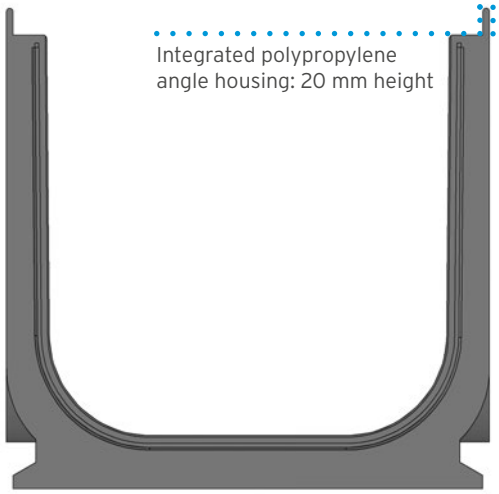

SERVICE CHANNEL RECYFIX PRO

Made of polypropylene with 20 mm integrated polypropylene angle housing

Nominal width:

- NW 200
- NW 300

Load class:

C 250; medium load situations with moderate traffic

DIN 19580 / EN 1433

The load classes are described in DIN 19580 / EN 1433 and standardised in classes A 15 to F 900. The specified values refer to the test load in kilo-newtons (kN).

SERVICE CHANNEL 200

Systems SERVICE CHANNELS

SERVICE CHANNEL RECYFIX®PRO 200 made of polypropylene with 20 mm integrated polypropylene angle housing, class C 250

Type 010, 1,0 m

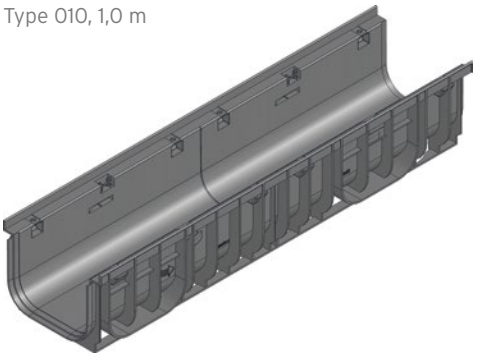

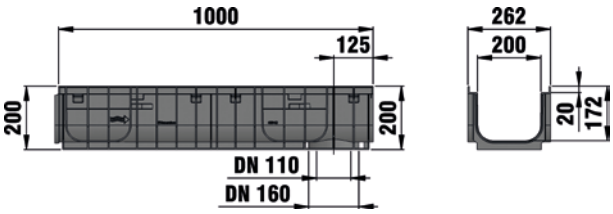

Ductile iron solid cover with opening for cables, (128 mm x 49 mm), black, KTL-coated, locked, 0,5 m

Ductile iron solid cover, black, KTL-coated, locked, 0,5 m

Cover for cable opening for ductile iron solid cover, KTL-coated steel, black

End cap with or without horizontal pipe outlet DN/OD 110, modified PP, type 010

	Length mm	Width mm	Height mm	Internal channel cross-sect. cm²	Weight kg	Item No.
Type 010, 1,0 m	1000	262	200	294	3,17	32071
Ductile iron solid cover, black, KTL-coated, locked, 0,5 m	500	249	20	-	8,41	32074
Ductile iron solid cover with opening for cables, (128 mm x 49 mm), black, KTL-coated, locked, 0,5 m	500	249	20	-	8,09	32075
Cover for cable opening for ductile iron solid cover, KTL-coated steel, black	152	59	20	-	-	32048
End cap with or without horizontal pipe outlet DN/OD 110, modified PP, type 010	-	258	217	0,20	0,20	32081
Locking handle and screw	-	-	-	0,05	0,05	32082

SERVICE CHANNEL 200

Accessories

Cable routing system

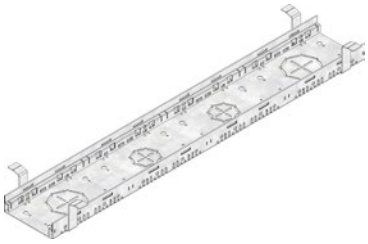

Cable tray, galvanised,
FASERFIX SUPER /
RECYFIX PRO 200, 1,0 m

	Length mm	Width mm	Height mm	Weight kg	Item No.
Cable tray, galvanised, SERVICE CHANNEL FASERFIX KS 200, 1,0 m	-	-	-	2,74	32083
Cable tray, galvanised, FASERFIX SUPER / RECYFIX PRO 200, 1,0 m	-	-	-	2,73	32084

Factory-made services

Cutting to length
of NW 200

	Length mm	Width mm	Height mm	Weight kg	Item No.
Cutting to length of NW 200	-	-	-	-	992
Mitre cuts NW 200 (price per cut, two cuts necessary)	-	-	-	-	997

SERVICE CHANNEL 300

Systems SERVICE CHANNELS

SERVICE CHANNEL RECYFIX®PRO 300 made of polypropylene with 20 mm integrated polypropylene angle housing, class C 250

Type 010, 1,0 m

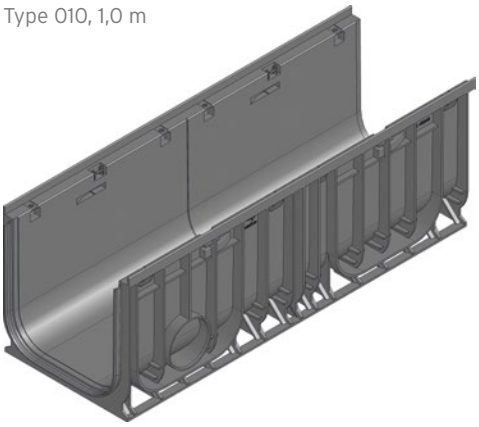

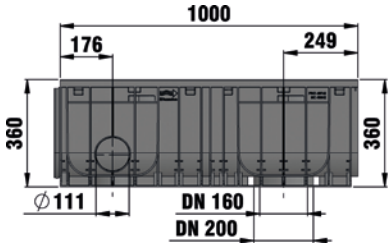

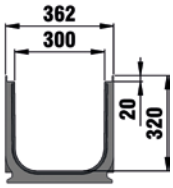

Ductile iron solid cover, black, KTL-coated, locked, 0,5 m

Ductile iron solid cover with opening for cables, (SW 128/49 mm), black, KTL-coated, locked, 0,5 m

Cover for cable opening for ductile iron solid cover, KTL-coated steel, black

Locking handle and screw

End cap closed, galvanised, type 010

	Length mm	Width mm	Height mm	Internal channel cross-sect. cm²	Weight kg	Item No.
Type 010, 1,0 m	1000	362	360	873	7,64	32087
Ductile iron solid cover, black, KTL-coated, locked, 0,5 m	500	349	20	-	11,80	32089
Ductile iron solid cover with opening for cables, (SW 128/49 mm), black, KTL-coated, locked, 0,5 m	500	349	20	-	14,10	32090
Cover for cable opening for ductile iron solid cover, KTL-coated steel, black	152	59	20	-	-	32048
Locking handle and screw	-	-	-	0,35	0,35	32094
End cap closed, galvanised, type 010	-	360	360	1,87	1,87	32093

SERVICE CHANNEL 300

Accessories

Cable routing system

Cable tray, galvanised, SERVICE CHANNEL FASERFIX KS 300, 1,0 m

Cable tray, galvanised, SERVICE CHANNEL FASERFIX SUPER/ RECYFIX PRO 300, 1,0 m

	Length mm	Width mm	Height mm	Weight kg	Item No.
Cable tray, galvanised, SERVICE CHANNEL FASERFIX KS 300, 1,0 m	-	-	-	3,21	32095
Cable tray, galvanised, SERVICE CHANNEL FASERFIX SUPER/RECYFIX PRO 300, 1,0 m	-	-	-	4,20	32096

Factory-made services

Cutting to length of NW 300

Mitre cuts NW 300 (price per cut, two cuts necessary)

	Length mm	Width mm	Height mm	Weight kg	Item No.
Cutting to length of NW 300	-	-	-	-	993
Mitre cuts NW 300 (price per cut, two cuts necessary)	-	-	-	-	998